CYPRESS
INTEGRATION SOLUTIONS

Edge Device

Serial Input and Output

SIO-7300

Product Manual

Made in the USA

RoHS

SIO-7300_MAN 260528

©2026 Cypress Computer Systems
1778 Imlay City Road, Lapeer, MI 48446 800-807-2977

Cypress SIO-7300 TCP/IP Edge Device - Specifications

Overview

The SIO-7300 is a TCP/IP Edge Device that supports Wiegand I/O, digital I/O, analog inputs and relay outputs, and is controlled by a network controller using the SIO protocol. The SIO-7300 allows the use of a single Wiegand reader without a traditional access control system. It can also be used as a remote Wiegand output device, controlled by a host device on the network.

Note: *Customers are responsible for creating custom software to interface their system with the SIO-7300 via the Cypress SIO protocol, which is detailed within this document.*

Specifications			
Part Number	SIO-7300	UPC: 816684003066	Ethernet Serial Input Output Unit
Physical	Aluminum enclosure		4.50” x 3.07” x 2.02” / 0.445 lbs
Environmental	Storage Temperature		-40˚C to 100˚C
	Operating Temperature		-30˚C to 60˚C
Electrical	Supply Voltage		8-16Vdc Current 300mA
	SPDT Relays	Max Switching	220Vdc 30W (resistive) 1A / 250Vac 37.5VA 1A
		Running Spec with load	30Vdc 1A (resistive) / 125 Vac 0.3A (resistive), $1x10^5$ operations @ 20˚C
Data I/O	Interface		Wiegand (4 - 248 bits)
			Strobed Rising (MR-5) (4 - 248 bits)
			Strobed Rising (Dorado 644) (4 - 248 bits)
			Strobed Rising (MagTek) (4 - 248 bits)
			Strobed Falling (4 - 248 bits)
			Unsupervised F/2F (4 - 248 bits)
Network Specifications	Network Interface		RJ45 Ethernet 10Base-T or 100Base-TX (auto-sensing)
	Compatibility		Ethernet: Version 2.0/IEEE 802.3 (electrical), Ethernet II frame type
	Protocols Supported		TCP/IP, ARP, UDP/IP, ICMP, DHCP, BOOTP, TFTP, Auto IP, HTTP, SMTP Note: For standard use cases, the SIO-7300 uses TCP/IP

Cypress SIO-7300 TCP/IP Edge Device - Table of Contents

Topic	Page
Overview and Specifications	2
Dimensions	4
Pin Designations	5
Circuit Board Assembly Features	6
Status LED Behavior	7
RJ45 LED Behavior	8
Input Mode Wiring Diagram	9
Output Mode Wiring Diagram	10
DIP Switches	11-12
Configuring Network Settings (Overview and Connecting to the SIO-7300)	13-15
Configuring Network Settings (Connecting via Telnet)	16-19
Configuring Network Settings (Connecting via web browser)	20-22
Configuring Network Settings (Default network settings)	23
Packet Structure	24
Status Values	25-26
Reader Data Formats	27
Sample Packets	28-36
I/O Pins Overview	37-38
LED I/O	39
AUX I/O	40-41
Analog Inputs	42-43
Relay Outputs	44-45

Cypress SIO-7300 TCP/IP Edge Device - Unit Dimensions

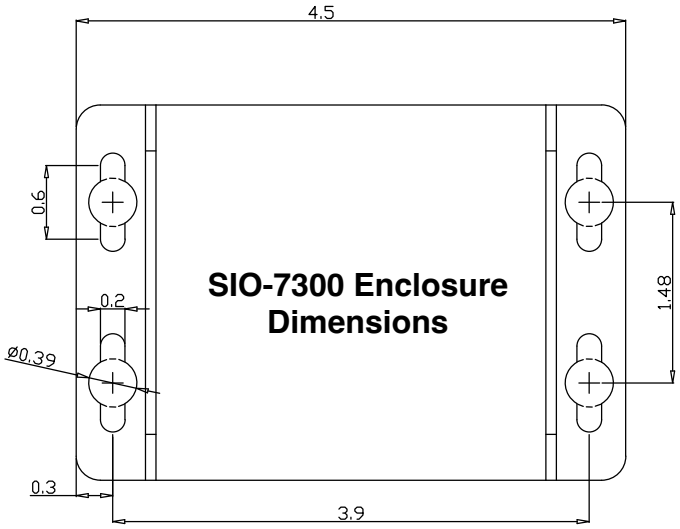

Dimensions in inches.

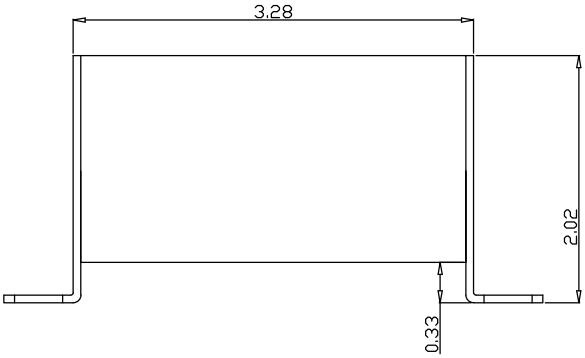

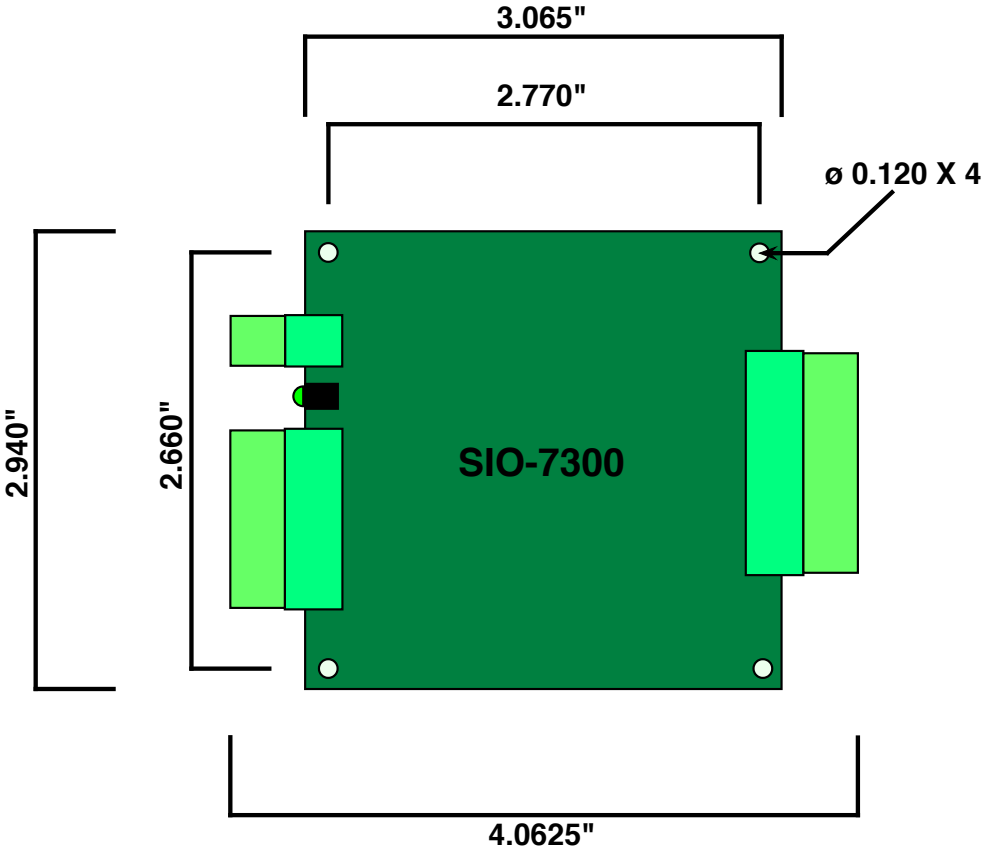

Cypress SIO-7300 TCP/IP Edge Device - Pin Designations

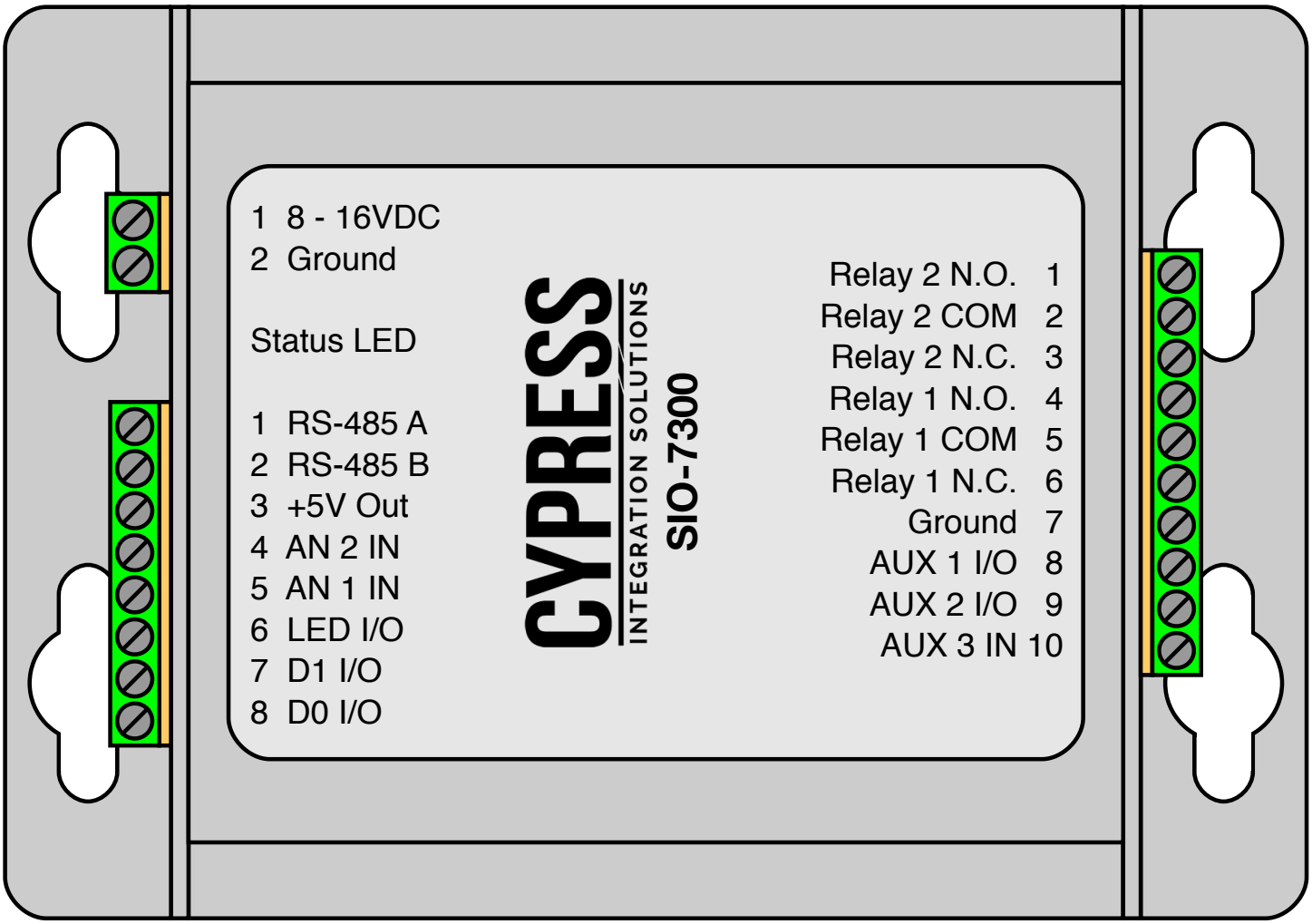

J1 - 2 pins
1 - Power (8-16V DC, 12V Nominal)
2 - Ground

J2 - 8 pins
1 - RS-485 A
2 - RS-485 B
3 - 5V DC (Output)
4 - Analog 2 (Input)
5 - Analog 1 (Input)
6 - LED (Input/Output)
7 - Wiegand Data 1 (Input/Output)
8 - Wiegand Data 0 (Input/Output)

J3 - 10 pins
1 - Relay 2 Normally Open
2 - Relay 2 Common
3 - Relay 2 Normally Closed
4 - Relay 1 Normally Open
5 - Relay 1 Common
6 - Relay 1 Normally Closed
7 - Ground
8 - AUX 1 (Input/Output)
9 - AUX 2 (Input/Output)
10 - AUX 3 (Input)

Cypress SIO-7300 TCP/IP Edge Device - Circuit Board Assembly

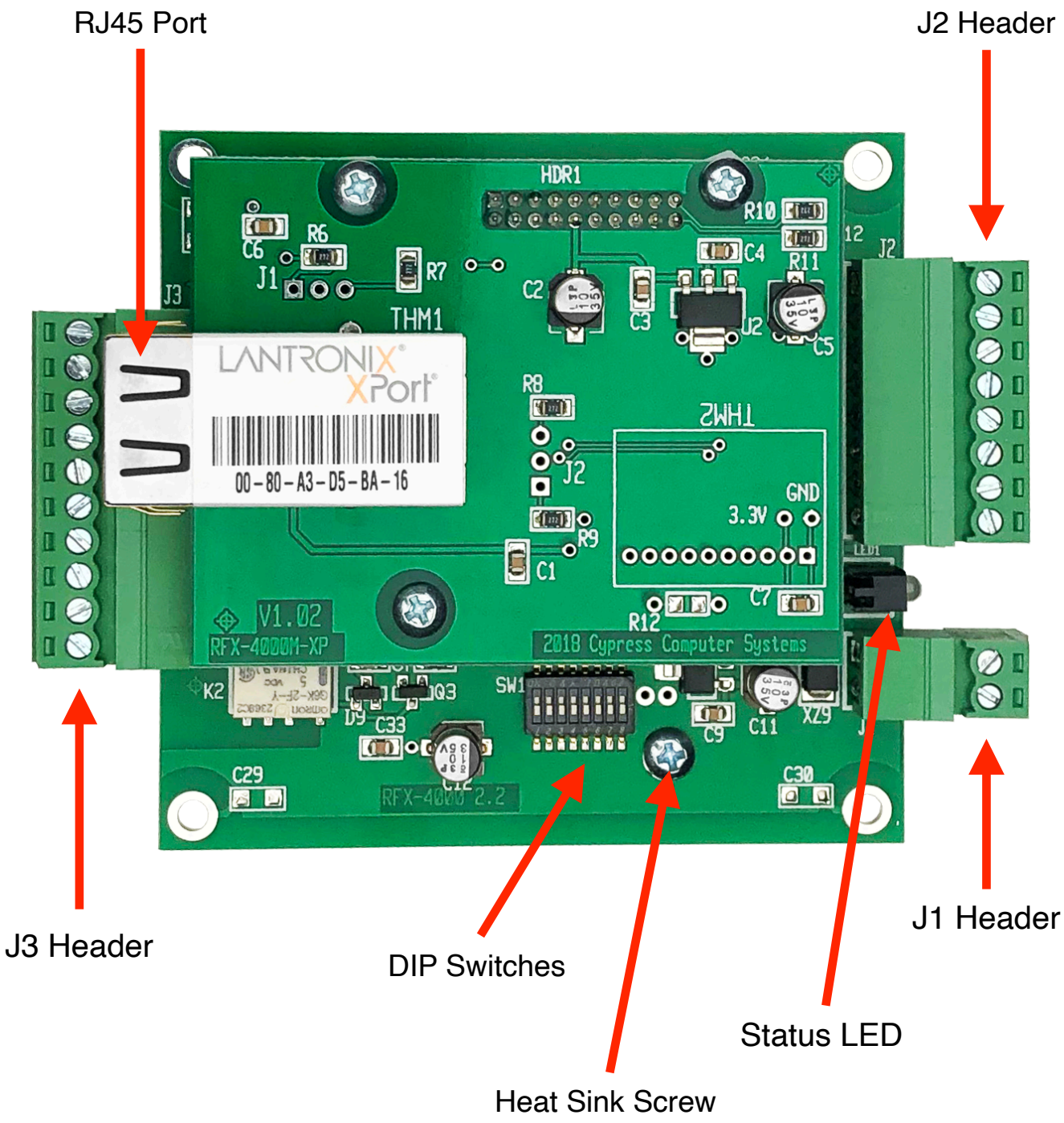

Cypress SIO-7300 TCP/IP Edge Device - Status LED Behavior

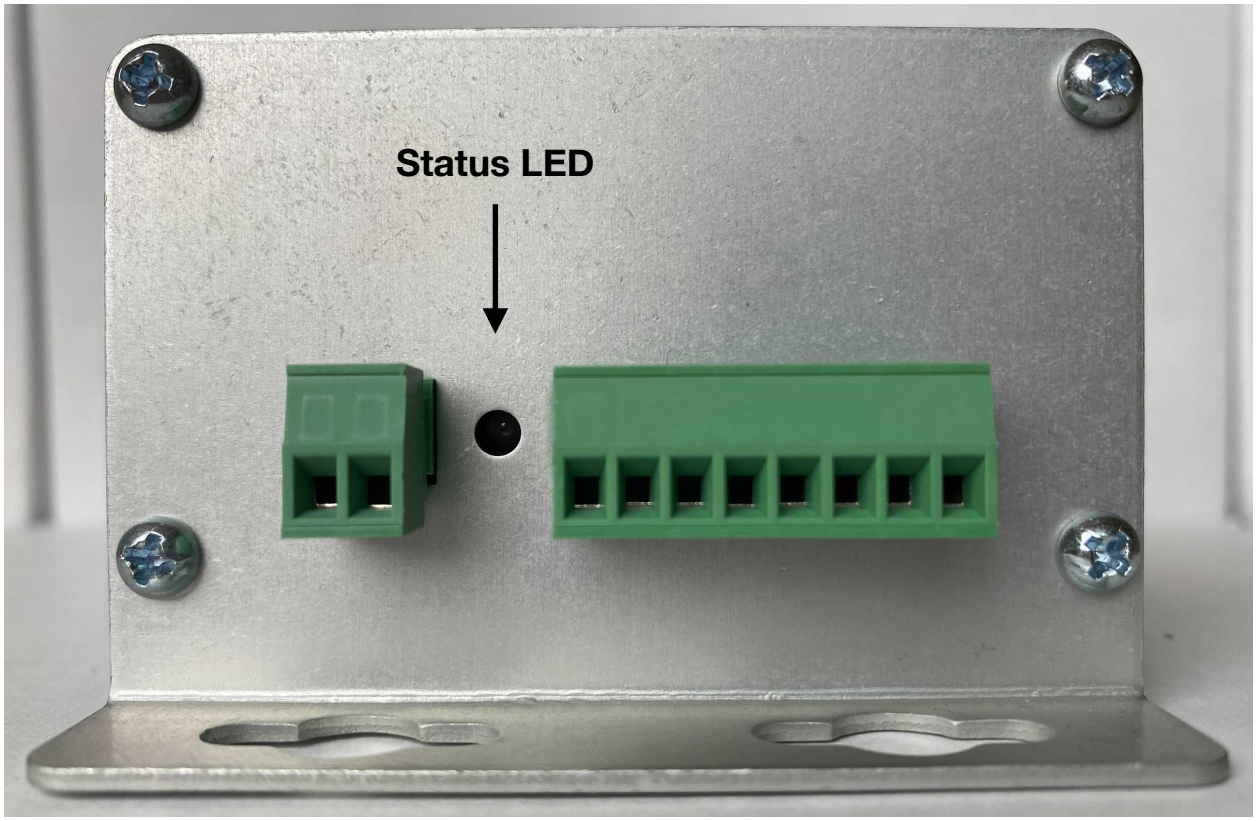

Run Mode

Solid Red - SIO-7300 is powered on.

Off - SIO-7300 is not powered on.

Configuration Mode

Solid Green - SIO-7300 is powered on and configuration settings have been applied.

Flashing Green - When the Network Settings are defaulted, the status LED will flash green for approximately 8 seconds until the network settings are applied. When the default network settings and configuration settings are applied, the status LED will be solid green.

Off - SIO-7300 is not powered on.

Cypress SIO-7300 TCP/IP Edge Device - RJ45 LED Behavior

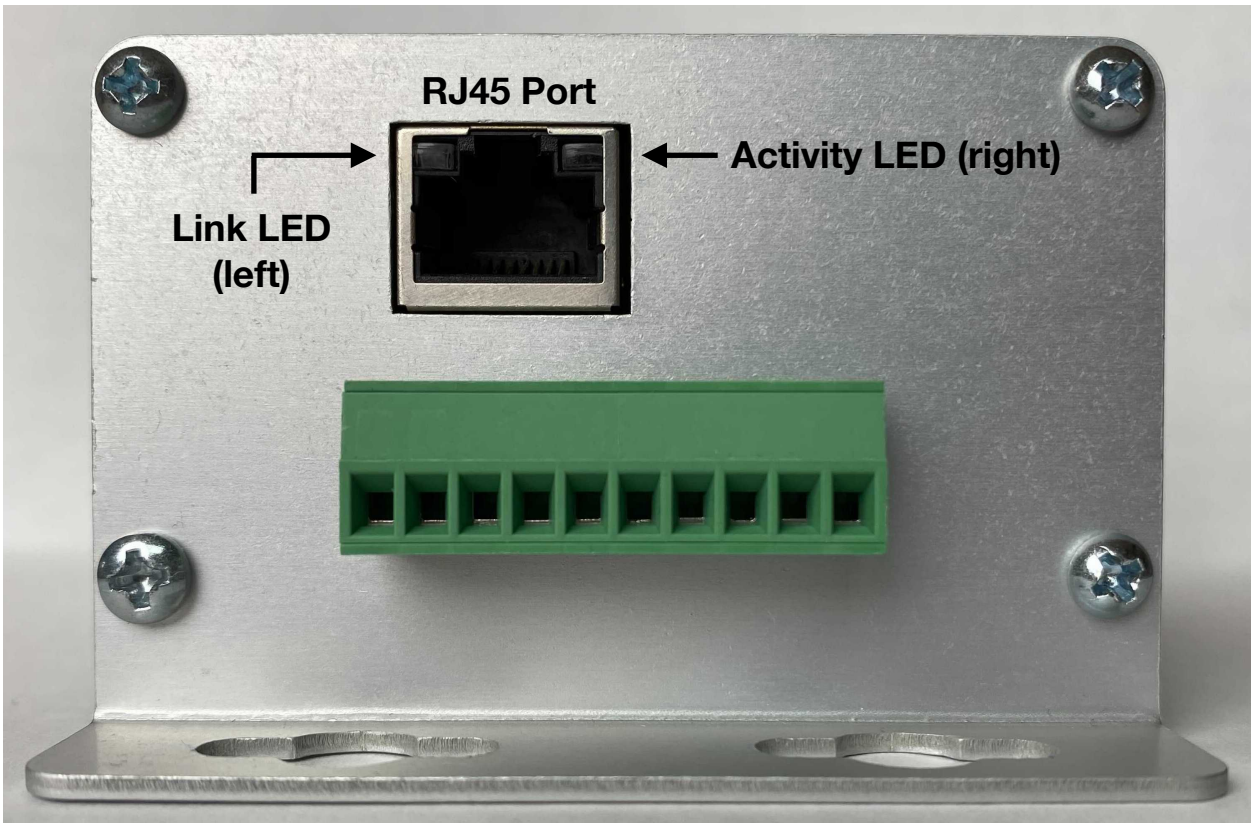

Link LED (left)		Activity LED (right)	
Color	**Meaning**	**Color**	**Meaning**
OFF	No Link	OFF	No Activity
Amber	10 Mbps	Amber	Half-Duplex
Green	100 Mbps	Green	Full-Duplex

Cypress SIO-7300 TCP/IP Edge Device - Input Mode Wiring Diagram

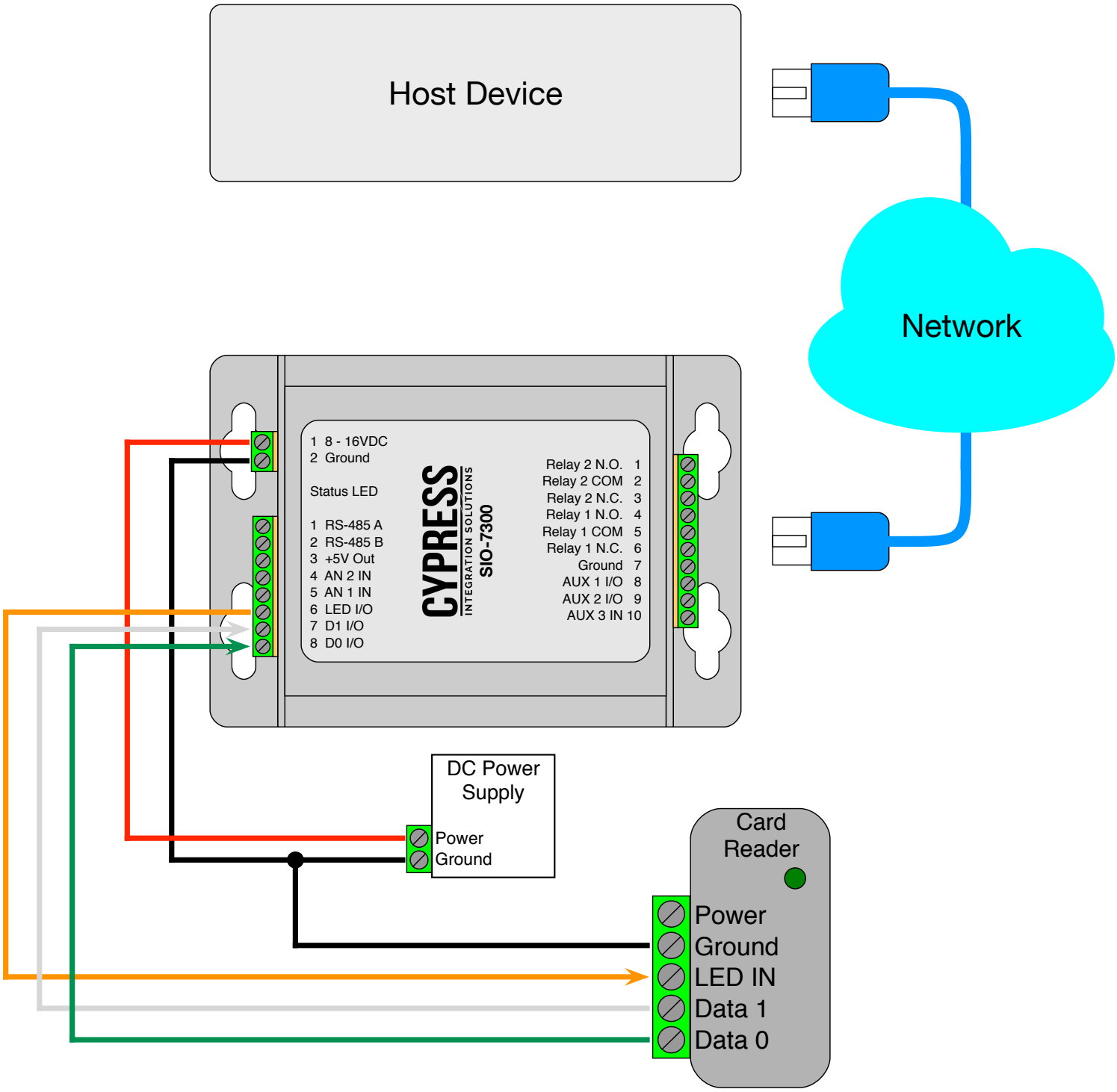

Cypress SIO-7300 TCP/IP Edge Device - Output Mode Wiring Diagram

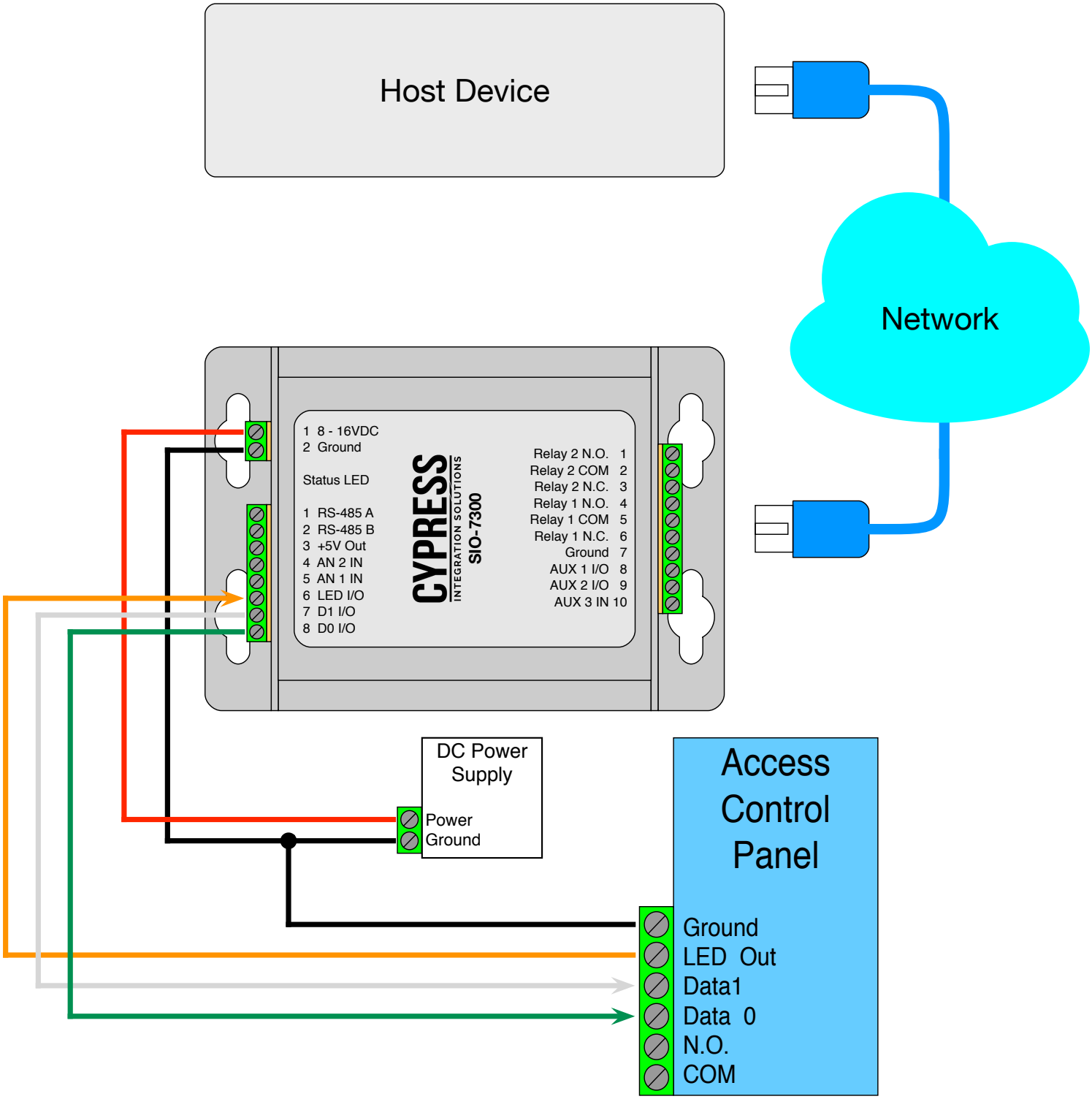

Cypress SIO-7300 TCP/IP Edge Device - DIP Switches

Overview

The DIP Switches control the SIO-7300 data interface, I/O direction, and can be used to set the network parameters to their default state. The DIP Switches are located on the main board of the SIO-7300 circuit assembly. The circuit assembly needs to be removed from the enclosure in order to access the DIP Switches. One of the end plates and the heat sink screw on the bottom of the enclosure needs to be removed in order to remove the circuit assembly from the enclosure.

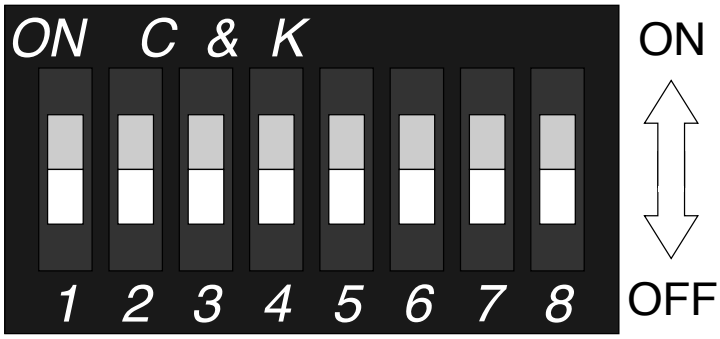

1	2	3	4	5	6	7	8	Description
1								When DIP Switch 1 is ON, the SIO-7300 is in Configuration Mode.
1	0							Maintain current network configuration settings.
1	1							Default network configuration settings.
1		0						Set SIO-7300 to Data Input Mode.
1		1						Set SIO-7300 to Data Output Mode.
1			0					Set AUX 1 as an Input.
1			1					Set AUX 1 as an Output.
1				0				Set AUX 2 as an Input.
1				1				Set AUX 2 as an Output.
1					0	0	0	Do not modify Wiegand interface setting.
1					0	0	1	Set data interface to 4-248 bit Wiegand.
1					0	1	0	Set data interface to 4-248 bit Wiegand.
1					0	1	1	Set data interface to 4-248 bit Strobed Rising (MR-5).
1					1	0	0	Set data interface to 4-248 bit Strobed Rising (Dorado 644).
1					1	0	1	Set data interface to 4-248 bit Strobed Rising (MagTek).
1					1	1	0	Set data interface to 4-248 bit Strobed Falling.
1					1	1	1	Set data interface to 4-248 bit Unsupervised F/2F.
0	1	0	0	0	0	0	0	When DIP Switch 1 is OFF and DIP Switch 2 is ON, the SIO-7300 is in Run Mode.

1 = Switch is ON 0 = Switch is OFF Blank = Switch is not relevant to specific parameter

DIP Switch Description

When DIP Switch 1 is ON, the SIO-7300 is in Configuration Mode. All changes to settings controlled by DIP Switches must be made in Configuration Mode.

In Configuration Mode, DIP Switch 2 controls network settings default. When DIP Switch 2 is OFF, the network settings will be maintained. When DIP Switch 2 is ON, the network settings will be set to their default state.

In Configuration Mode, DIP Switch 3 controls the Wiegand interface I/O direction. When DIP Switch 3 is OFF, the Wiegand interface is set as an Input. When DIP Switch 3 is ON, the Wiegand interface is set as an Output.

In Configuration Mode, DIP Switch 4 Controls the AUX 1 I/O pin direction. When DIP Switch 4 is OFF, the AUX 1 pin is set as an Input. When DIP Switch 4 is ON, The AUX 1 pin is set as an Output.

In Configuration Mode, DIP Switch 5 Controls the AUX 2 I/O pin direction. When DIP Switch 5 is OFF, the AUX 2 pin is set as an Input. When DIP Switch 5 is ON, The AUX 2 pin is set as an Output.

In Configuration Mode, DIP Switches 6, 7, & 8 control the data interface. There are six data interface modes; Wiegand, Strobed Rising (MR5), Strobed Rising (Dorado 644), Strobed Rising (MagTek), Strobed Falling, and Unsupervised F/2F. These settings are detailed in the table on the previous page.

When DIP Switch 1 is OFF and DIP Switch 2 is ON, the SIO-7300 is in Run Mode.

Default DIP Switch Settings

The SIO-7300 is shipped in Run Mode. It is set to Data Input Mode, AUX 1 and AUX 2 are set as inputs, and the data interface is set to Wiegand. The Network Settings are set to their default parameters.

Configuring the SIO-7300 to the Default Settings

1. Power off the SIO-7300 and remove the board assembly from the enclosure.
2. Turn DIP Switch 2 OFF.
3. Turn ON DIP Switch 1 to enter Configuration Mode.
4. Turn ON DIP Switch 2 to default the network settings.
5. Turn OFF DIP Switch 3 to set the device to Data Input Mode.
6. Turn OFF DIP Switch 4 to set to AUX 1 as an input.
7. Turn OFF DIP Switch 5 to set to AUX 2 as an input.
8. Turn ON DIP Switch 8 to set the data interface to 4-248 bit Wiegand.
9. Power on the SIO-7300. The status LED will flash green while the SIO-7300 is being configured and when the configuration is complete, the status LED will be solid green.
10. Power off the SIO-7300. Turn all of the DIP Switches OFF, turn ON DIP Switch 2 only to set the SIO-7300 to Run Mode.

General Configuration Steps

1. Power off the SIO-7300 and remove the board assembly from the enclosure.
2. Turn DIP Switch 2 OFF.
3. Turn ON DIP Switch 1 to enter Configuration Mode.
4. Set DIP Switches 2-7 as desired.
5. Power on the SIO-7300. The status LED will flash green while the SIO-7300 is being configured and when the configuration is complete, the status LED will be solid green.
6. Power off the SIO-7300. Turn all of the DIP Switches OFF, turn ON DIP Switch 2 only to set the SIO-7300 to Run Mode.

Cypress SIO-7300 TCP/IP Edge Device - Configuring Network Settings

Overview

This section covers how to configure the SIO-7300 network settings. There are two methods of configuring the SIO-7300 network settings; through Telnet and through a web browser. The default network settings are listed at the end of this section.

The SIO-7300 should be in Run Mode and not connected to, or communicating with a host device while configuring the network settings. The SIO-7300 should be directly connected to the computer being used to configure it.

Connecting to the SIO-7300

The SIO-7300 has a default IP address of 192.168.49.59. Telnet and the web browser need to be able to connect to this IP address, and the computer's network settings need to be changed to be compatible with it. This is done through he Network and Sharing Center on Windows computers.

Open the Control Panel and click on Network and Sharing Center.

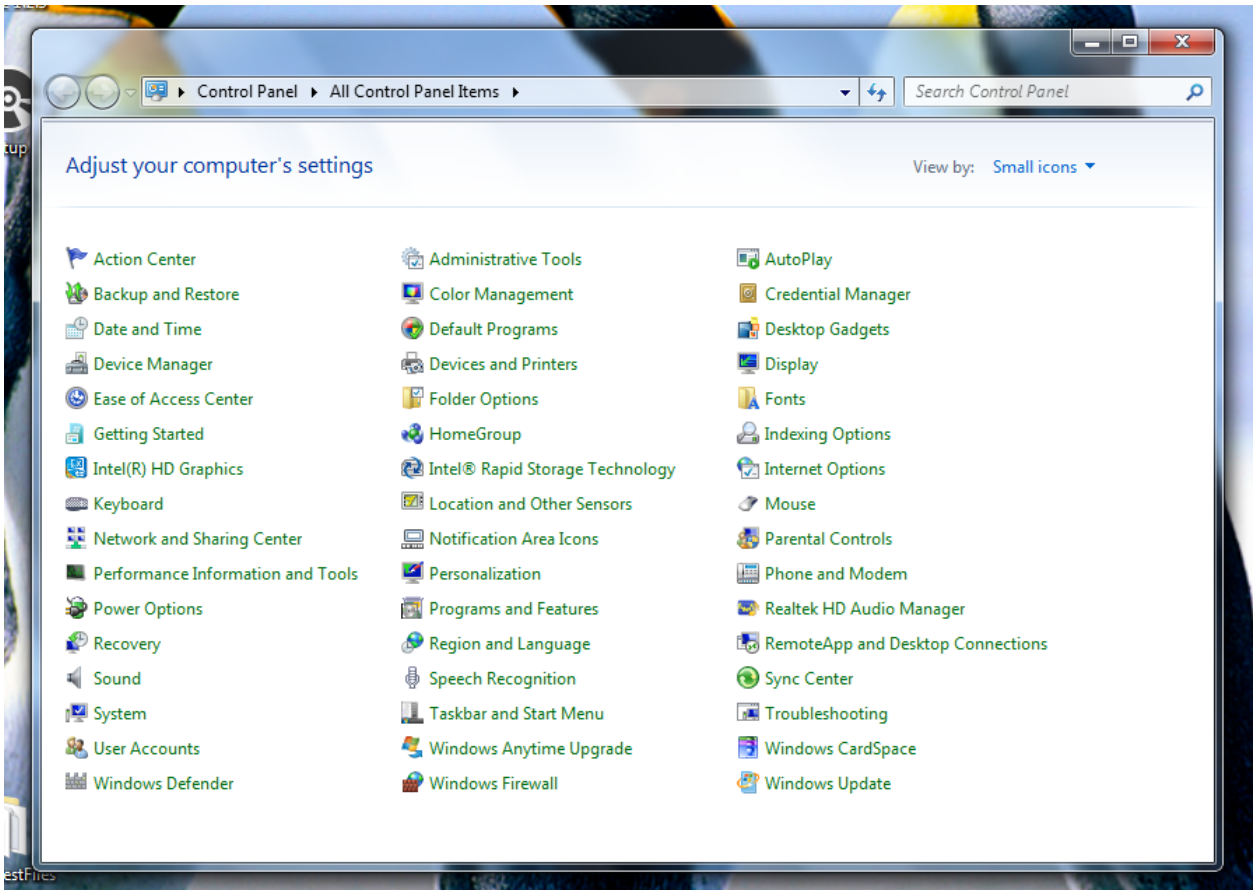

Cypress SIO-7300 TCP/IP Edge Device - Configuring Network Settings

At the Network and Sharing Center, click on “Change adapter settings” on the left side of the screen.

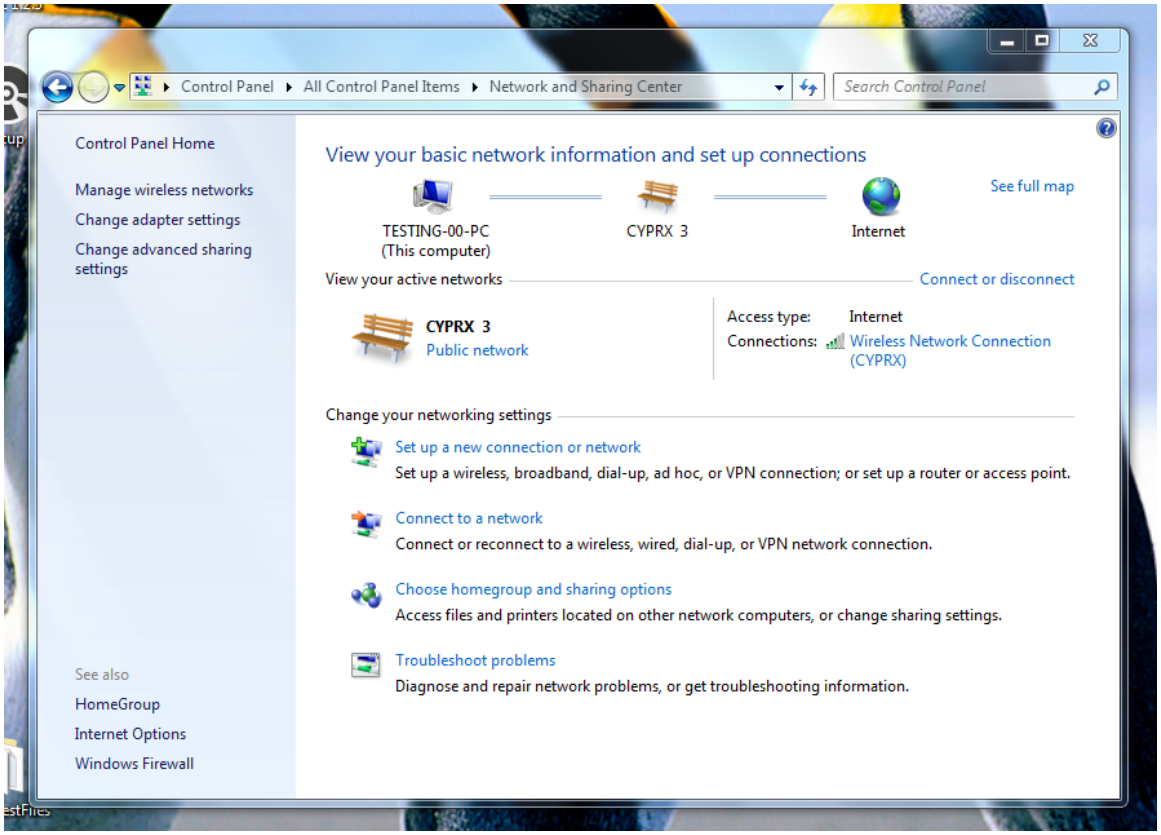

Disable any wireless network connections (if any are present) by right-clicking the wireless network, and select Disable from the drop-down menu.

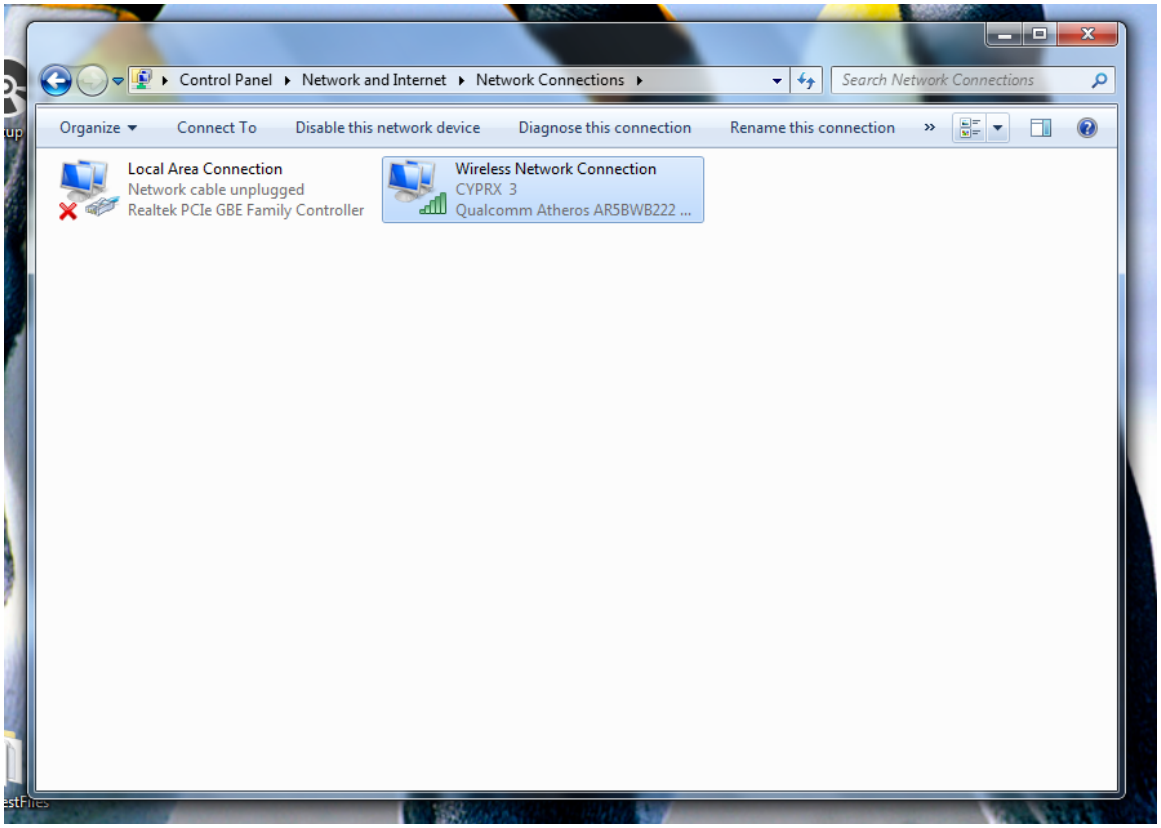

Cypress SIO-7300 TCP/IP Edge Device - Configuring Network Settings

Right-click on the Local Area Connection; the Local Area Connection Properties window will appear.

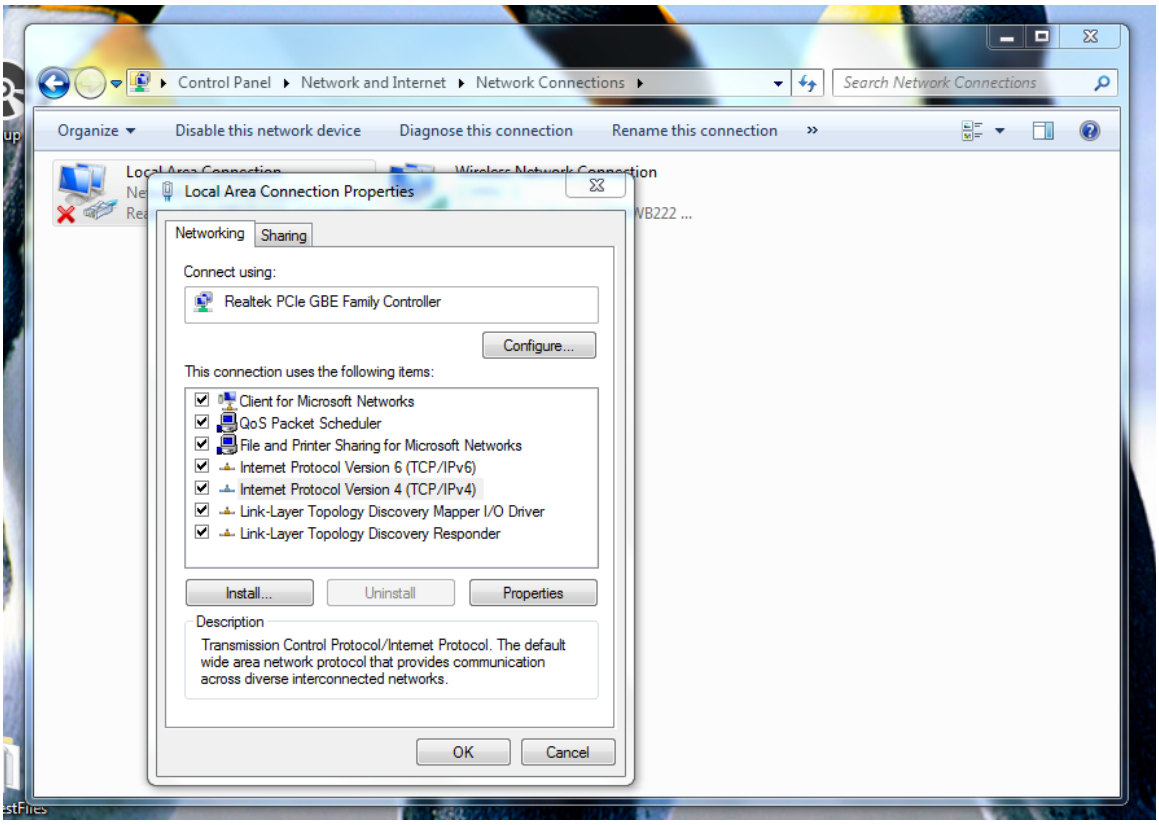

Double-click on Internet Protocol Version 4; the IPv4 Properties window will appear. Select “Use the following IP address:” and enter the IP address 192.168.49.100 with a Subnet Mask of 255.255.255.0.

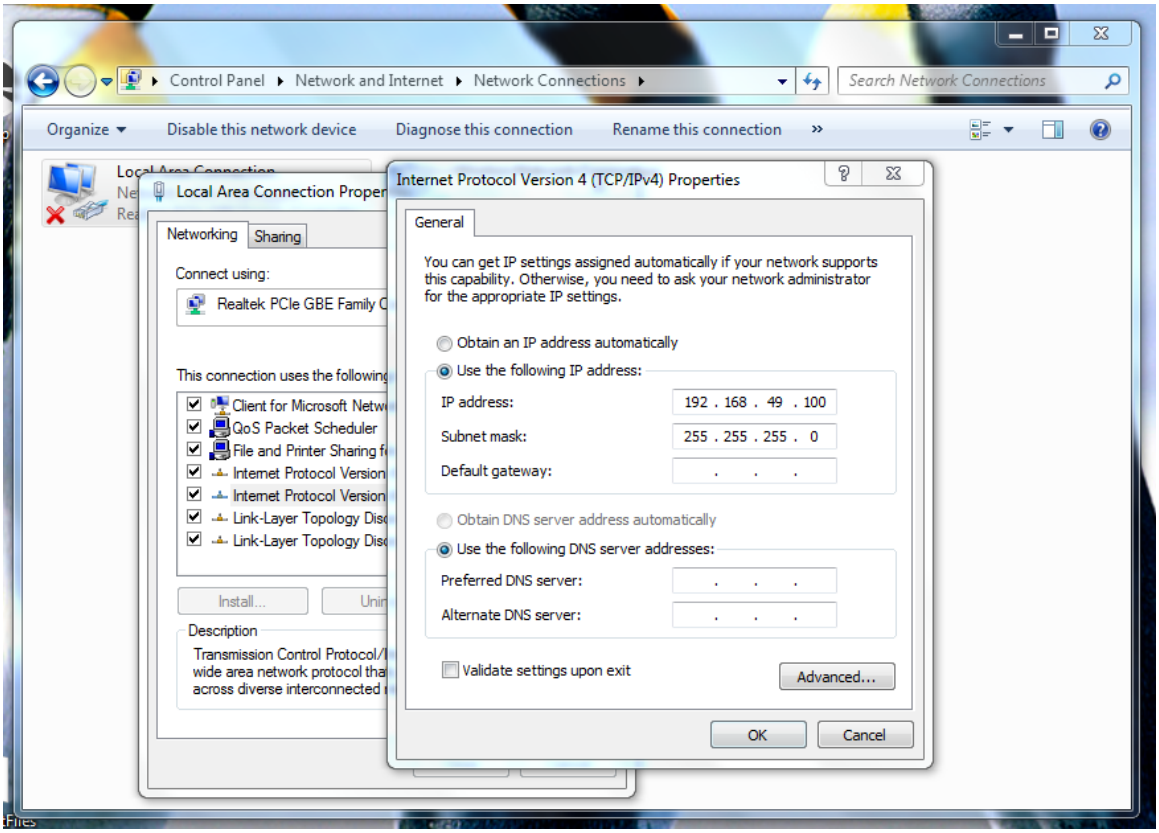

Connecting via Telnet

Telnet is accessed through the Windows Command Prompt. Telnet may not be enabled by default; be sure to enable it before continuing with Telnet. Below is the response from Command Prompt if Telnet is disabled.

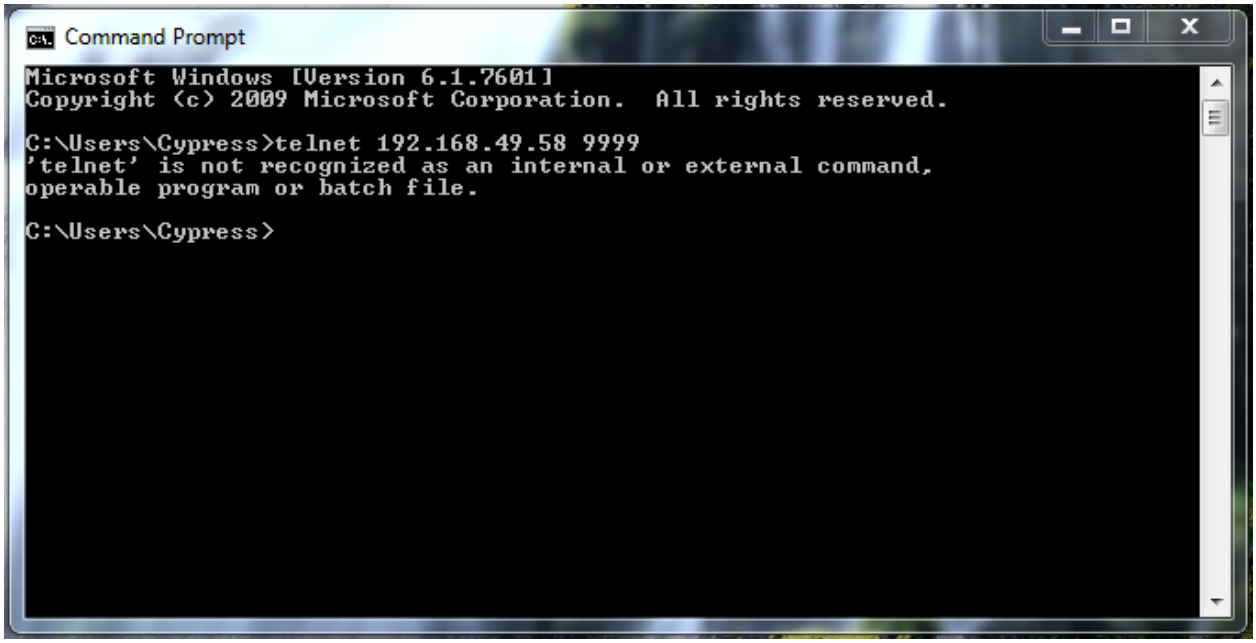

If/once Telnet is enabled, enter the Telnet command into Command Prompt. The Telnet command has two arguments, the IP address and the port number. The IP address is the IP address of the SIO-7300, by default it is 192.168.49.59. The SIO-7300 only accepts Telnet requests on port 9999. Enter the Telnet command and press enter.

```
telnet [IP Address] [Port Number]

telnet 192.168.49.59 9999
```

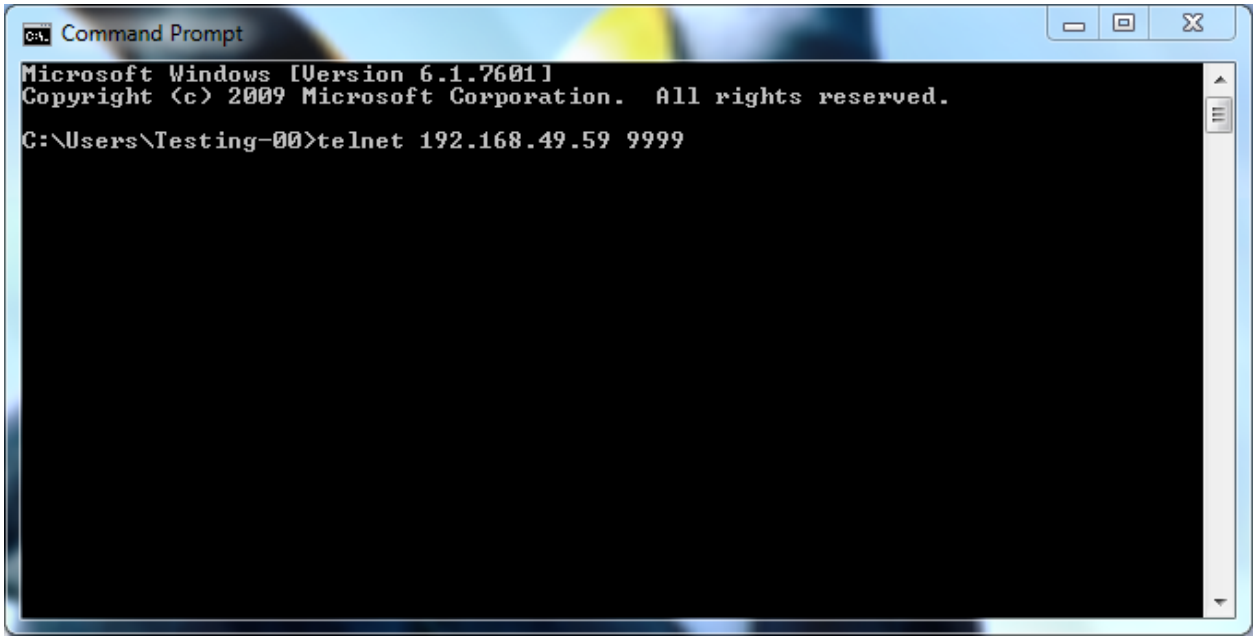

Cypress SIO-7300 TCP/IP Edge Device - Configuring Network Settings

When the Telnet connection is successful, the screen will change to match the picture below. Press enter to proceed to the main menu.

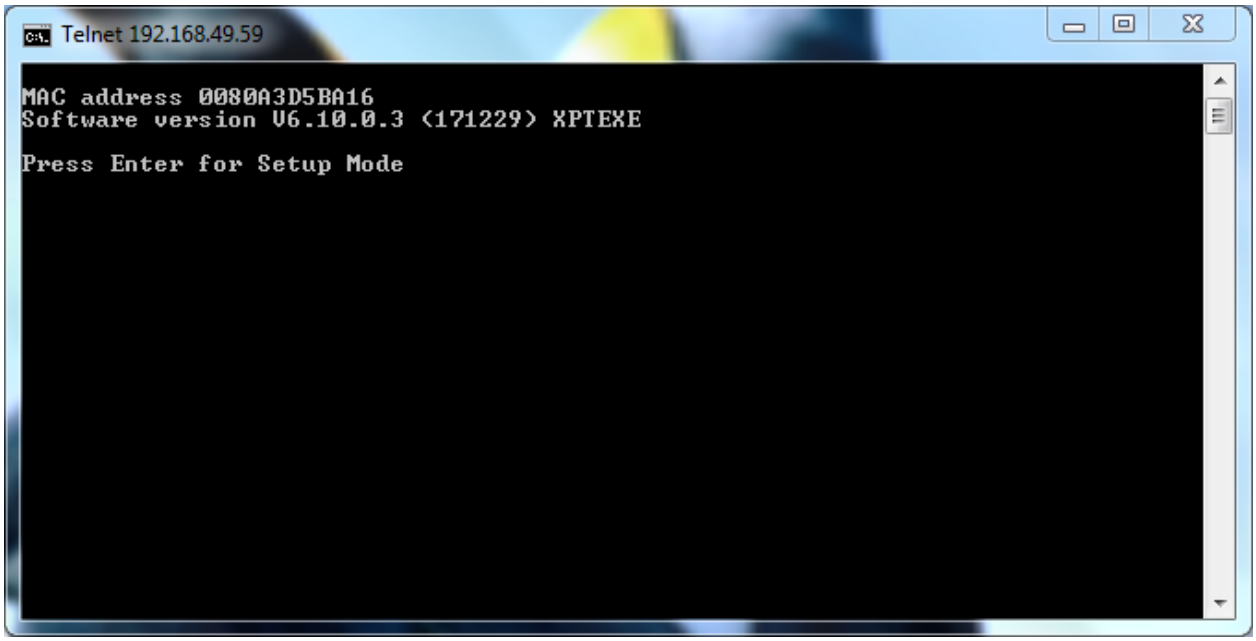

The main menu lists the sub menus. Most parameters concerning the SIO-7300 are in the Server, Channel 1, Expert, and Security menus. When finished changing the network settings, select option 9 to save and exit.

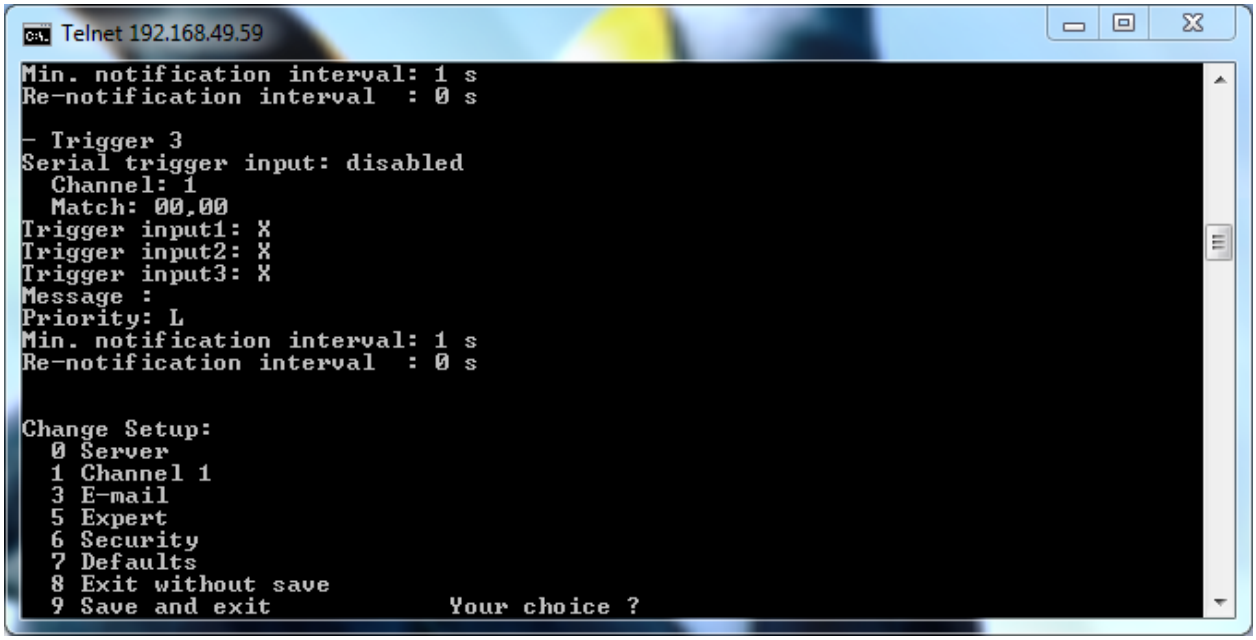

Cypress SIO-7300 TCP/IP Edge Device - Configuring Network Settings

Below are the Server menu parameters. Notably, the Server menu is where the IP address is changed.

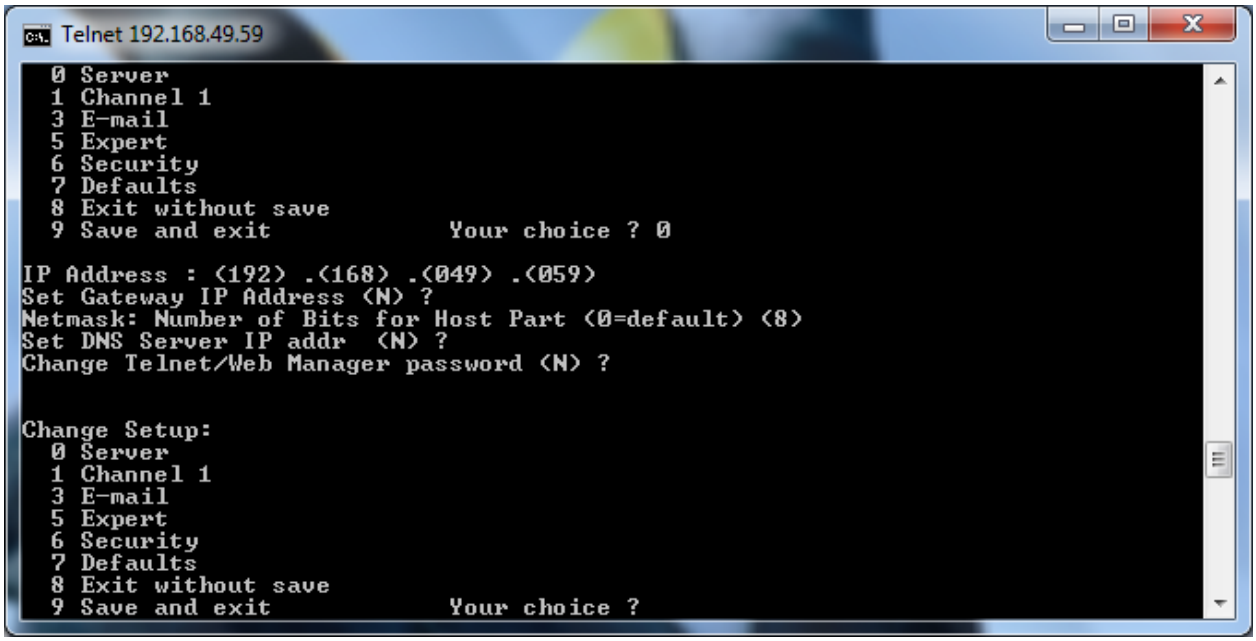

Below are the the Channel 1 menu parameters.

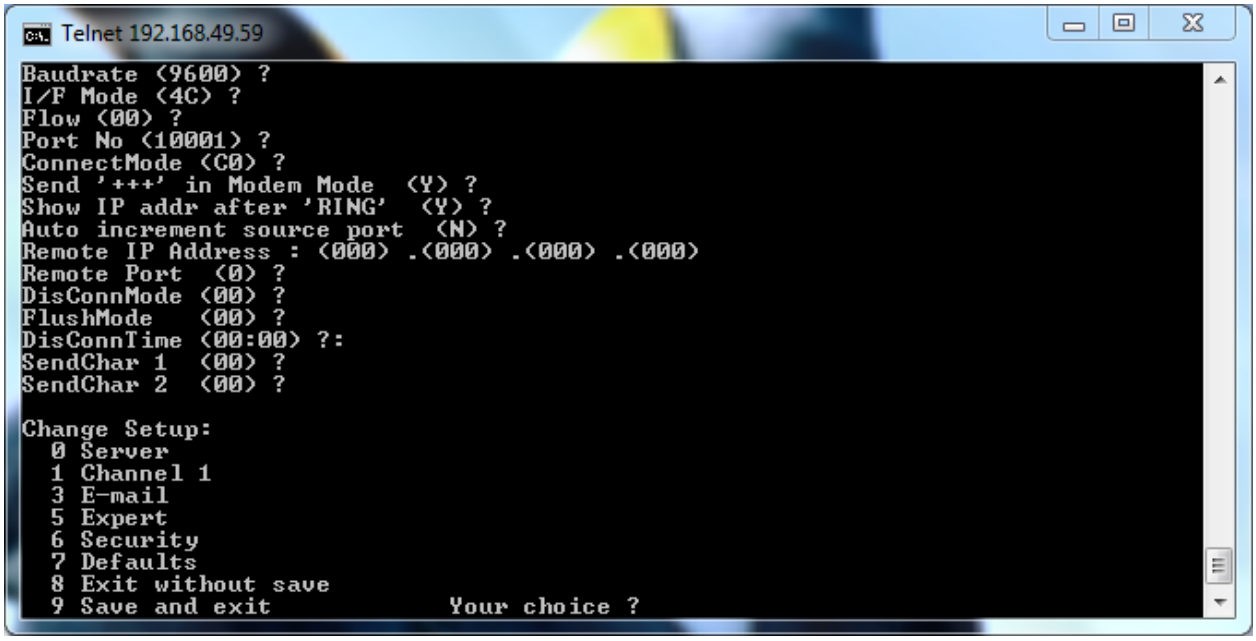

Below are the Expert menu parameters.

```
Telnet 192.168.49.59
TCP Keepalive time in s (1s - 65s; 0s=disable):  (45) ?
ARP Cache timeout in s (1s - 600s) :  (600) ?
CPU performance (0=Regular, 1=Low, 2=High):  (1) ?
Disable Monitor Mode @ bootup (N) ?
RS485 tx enable active level (0=low; 1=high):  (0) ?
HTTP Port Number :  (80) ?
SMTP Port Number :  (25) ?
MTU Size (512 - 1400):  (1400) ?
TCP Re-transmission Timeout (500 - 4000) (ms):  (500) ?
Enable alternate MAC (N) ?
Ethernet connection type:  (0) ?

Change Setup:
  0 Server
  1 Channel 1
  3 E-mail
  5 Expert
  6 Security
  7 Defaults
  8 Exit without save
  9 Save and exit            Your choice ?
```

Below are the Security menu parameters.

```
Telnet 192.168.49.59
Disable SNMP (N) ?

SNMP Community Name ():

Disable Telnet Setup (N) ?

Disable TFTP Firmware Update (N) ?

Disable Port 77FEh (N) ?

77FEh Access Mode (0=Read & Write, 1=Read Only):  (0) ?

Disable Web Server (N) ?

Disable Web Setup (N) ?

Disable ECHO ports (Y) ?

Enable Enhanced Password (N) ?

Disable Port 77F0h (N) ?

Change Setup:
  0 Server
  1 Channel 1
  3 E-mail
  5 Expert
  6 Security
  7 Defaults
  8 Exit without save
  9 Save and exit            Your choice ?
```

Connecting via Web Browser

This example uses Google Chrome. Enter the IP address of the SIO-7300 into the address bar; the default IP address of the SIO-7300 is 192.168.49.59. The web browser will prompt the user login with a username and password. Since no username or password are necessary, simply click “Sign In” to proceed.

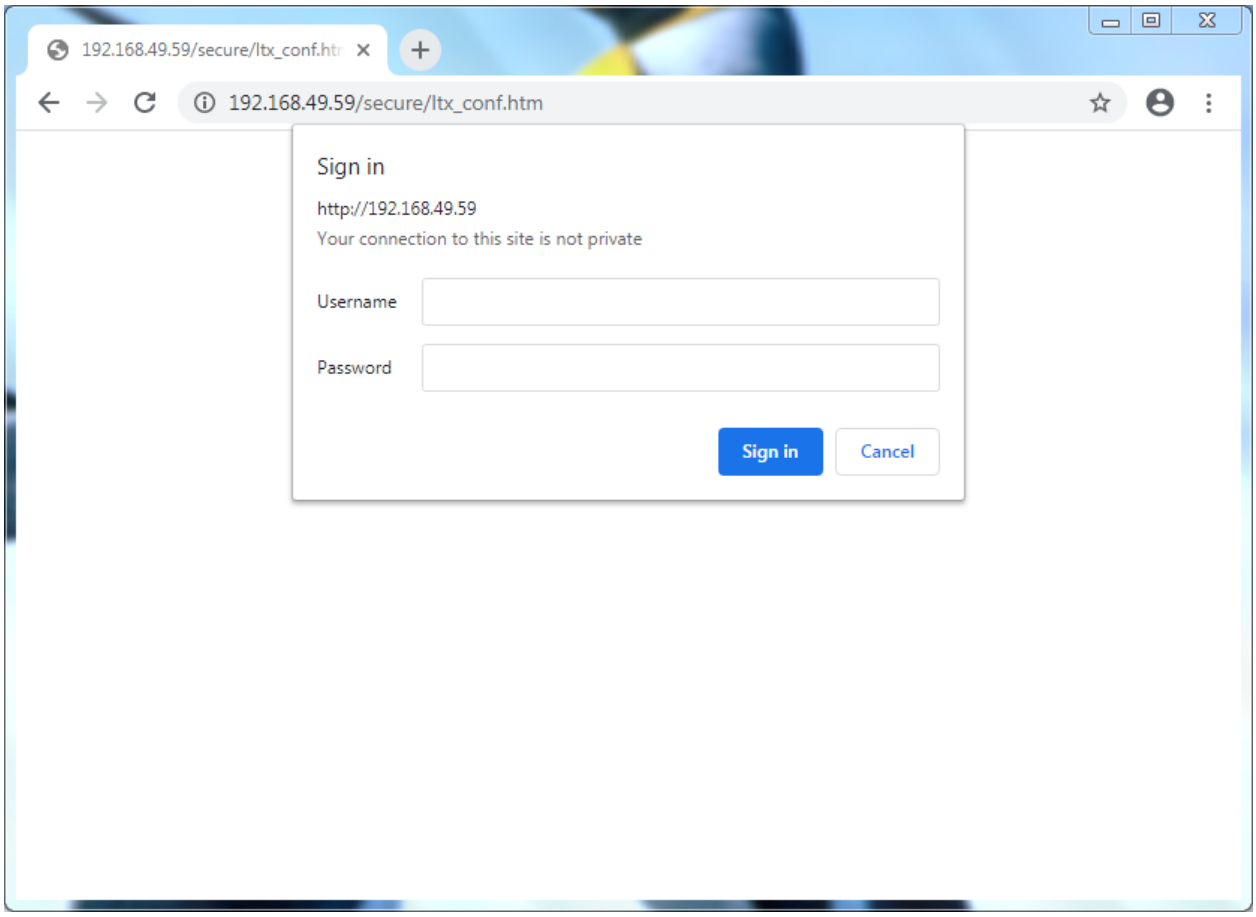

Cypress SIO-7300 TCP/IP Edge Device - Configuring Network Settings

The XPort main menu is pictured below. The sub menus are located on the left side of the screen. Click on Network, Server, and Connection to navigate to those menus. When finished changing network settings, click “Apply Settings”. The SIO-7300 Ethernet module will reboot.

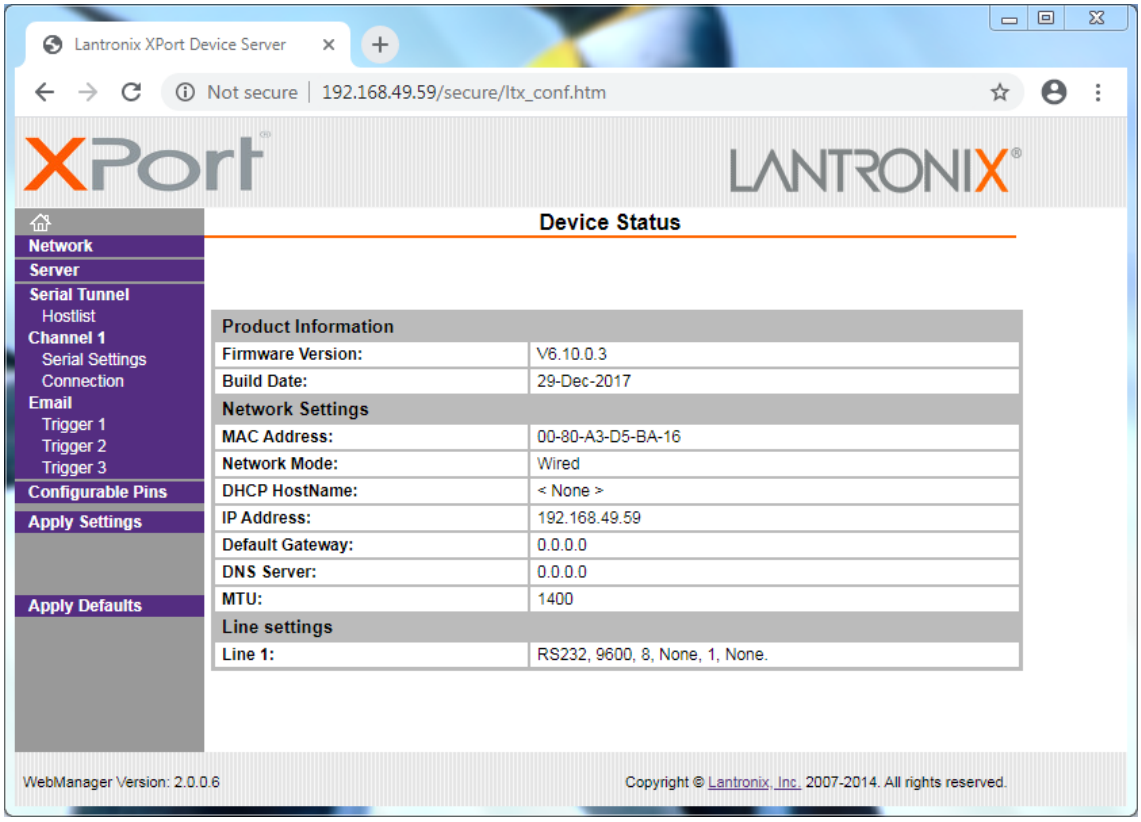

Below is the Network Settings menu. This is where the IP address can be changed.

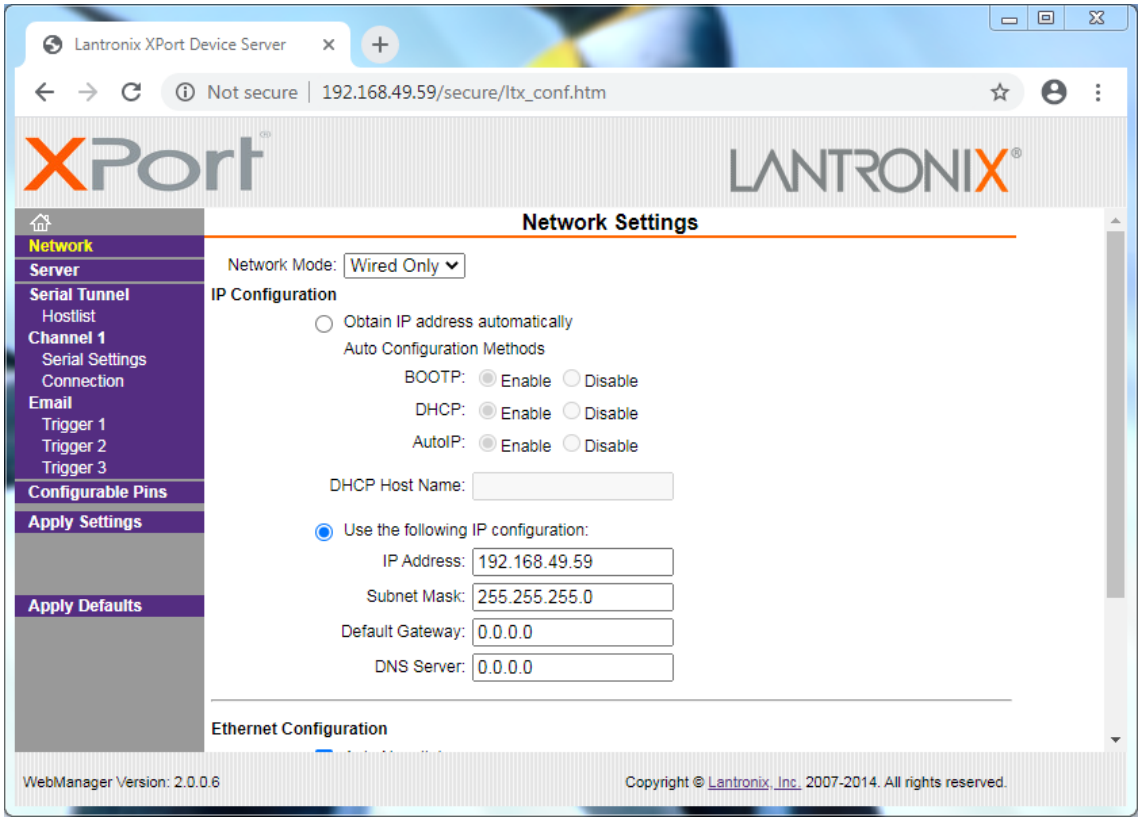

Cypress SIO-7300 TCP/IP Edge Device - Configuring Network Settings

Below is the Server Settings menu.

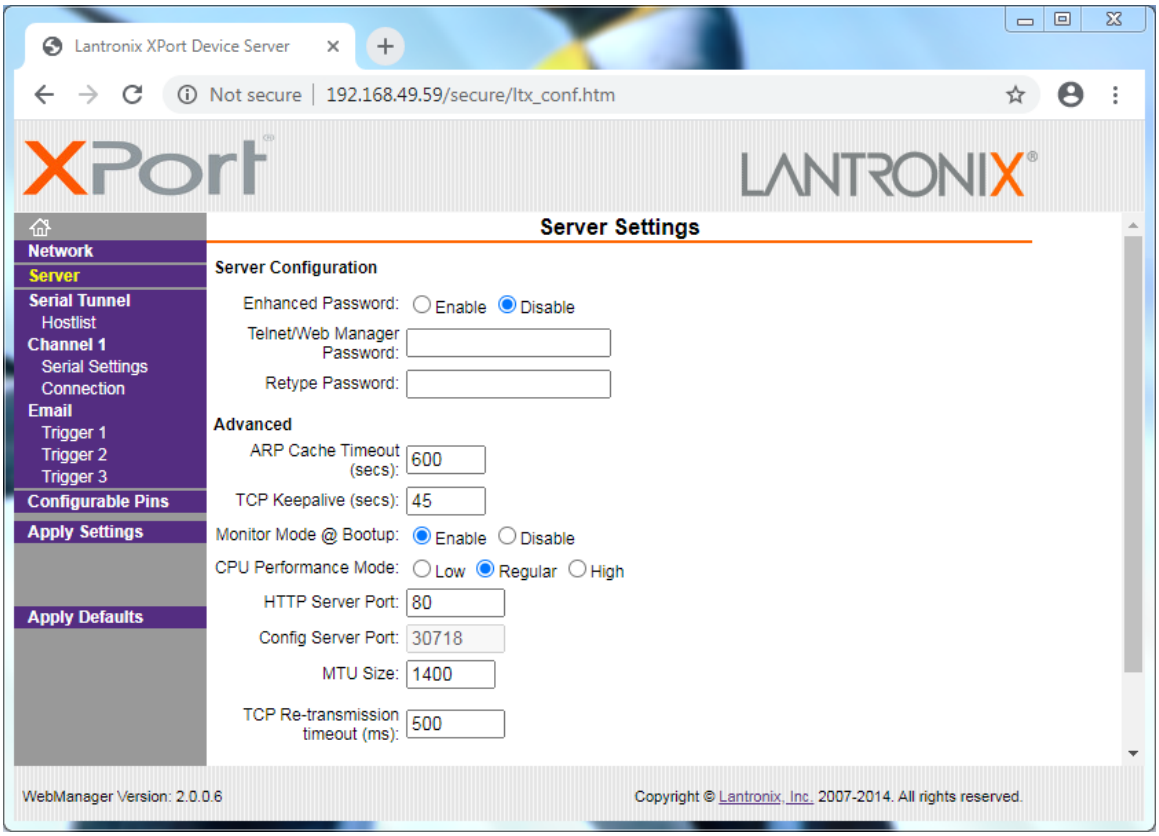

Below is the Connection Settings menu.

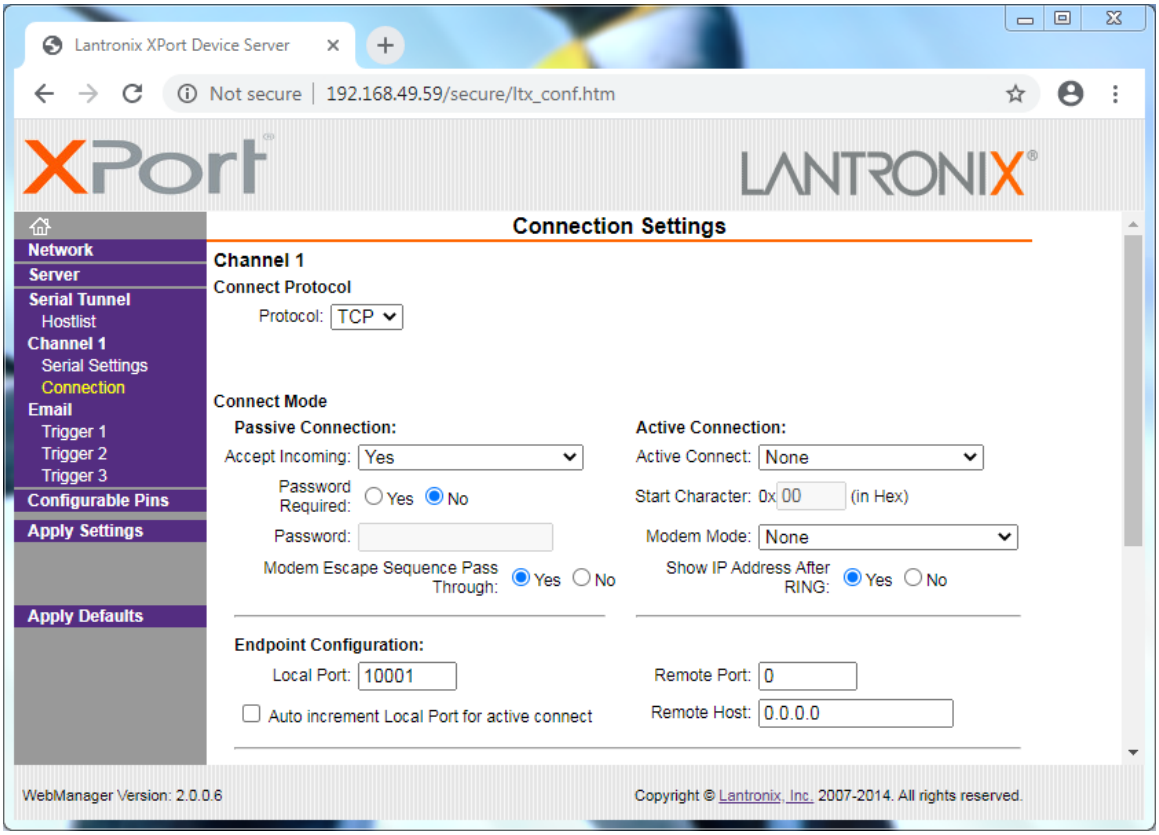

Default Network Settings

Basic Parameters

Hardware:.....Ethernet TPI
IP Address:.....192.168.49.59, no gateway set, netmask 255.255.255.0
DNS Server:.....Not Set
DHCP FQDN Option:.....Disabled

Security

SNMP:.....Enabled
SNMP Community Name:.....Not Set
Telnet Setup:.....Enabled
TFTP Download:.....Enabled
Port 77FEh:.....Enabled
77FEh Access Mode:.....Read & Write
Web Server:.....Enabled
Web Setup:.....Enabled
ECHO:.....Disabled
Enhanced Password:.....Disabled
Port 77F0h:.....Enabled

Channel 1

Baudrate:.....9600, I/F Mode 4C, Flow 00
Port:.....10001
Connect Mode:.....C0
Send “+++” in Modem Mode:.....Enabled
Show IP address after RING:.....Enabled
Auto increment source port:.....Disabled
Remote IP Address:.....None, Port 00000
Disconn Mode:.....00
Flush Mode:.....00

Expert

TCP Keepalive:.....45s
ARP Cache Timeout:.....600s
CPU Performance:.....Low
Monitor Mode @ Bootup:.....Enabled
RS485 TX Enable:.....Active Low
HTTP Port Number:.....80
SMTP Port Number:.....25
MTU Size:.....1400
TCP Re-transmission Timeout:.....500ms
Alternate MAC:.....Disabled
Ethernet Connection Type:.....Auto-Negotiate

Cypress SIO-7300 TCP/IP Edge Device - Packet Structure

The SIO-7300 accepts one TCP connection at a time on port 10001. The host software sends binary encoded data to the SIO-7300. If the data was formatted properly, the SIO-7300 will respond accordingly. If the SIO-7300 did not receive correctly formatted data, it will not respond.

The SIO-7300 protocol consists of commands and responses, which share a common format. If any of the fields are incorrect or invalid, the device does not respond.

```
[sync][length][source][destination][type][response][command][status][data][checksum]
```

Field Name	Field Length	Field Description
Sync	3 bytes	0x000000. Used to signify the beginning of a packet.
Length	1 byte	The length of the packet, starting from Length (excluding Sync).
Source	1 byte	The address of the device from which this packet originated. This begins with 0x01 plus the address of any expansion devices. The host's address is 0xF1.
Destination	1 byte	The address of the devices to which this packet is being sent.
Type	1 byte	Set depending on the device that created the message. If the host device (network controller) created the message, it is 0xF1; otherwise it is 0x01.
Response	1 byte	Constant value of 0x06.
Command	1 byte	Constant value of 0x00
Status	1 byte	The command/response codes. This primarily controls the size and contents of the Data field. If an invalid status value is received, the SIO-7300 will use the default NoData status, this does not return a reply.
Data	2-32 bytes	Depending on the Status, this filed may contain I/O data or reader data. See the tables below for more information.
Checksum	1 byte	The sum of all data in the packet before the Checksum Field, modulo 0x100 (masked to one byte).

Cypress SIO-7300 TCP/IP Edge Device - Status Values

Status	Status Name	Data Field Length	Data Field Contents
0x08 (Command)	Enable LED Out	0 bytes	Sets the LED to be an output. SIO-7300 responds with the Clear Read status 0x09.
0x09 (Command)	Clear Read	2 bytes	The first byte is a bit mask to control the state of each digital output and relay. The second byte must be 0x00. The SIO-7300 is then reset for the next read, clearing the I/O and reader buffer.
0x09 (Response)	Clear Read	0 Bytes	Reply to the Clear Read command. The data field is empty.
0x12 (Command)	Expanded Idle	2 bytes	The first byte controls the state of each digital output and relay. The second byte must be 0x00. See Output State. If the SIO-7300 is in Wiegand Input Mode and has received reader data, it will respond with the Reader Data Status 0x16 in the 24-248 bit format. If fewer than 40 bits are expected, send the Idle Status 0x15 (Poll) instead. After receiving reader data, the host must issue a Clear Reader Status 0x09 to the SIO-7300. If the SIO-7300 is in Wiegand Output Mode or has not received reader data, the SIO-7300 will reply with the Idle Status 0x15 (Response).
0x14 (Command)	Reset State	2 bytes	Resets the Reader, uses the first byte of the message's Data Field to control the devices outputs, and returns a reply with an input Data Field and status of 0x14.
0x15 (Command)	Idle	2 bytes	The first byte is a bit mask to control the state of each digital output and relay. The second byte must be 0x00. See SIO-7300 Output Data for the bit mask. If the SIO-7300 is configured for Wiegand Input and it has received Wiegand data, the SIO-7300 will respond with the Reader Data status 0x16 in the 24-40 bit format. If more than 40 bits are expected, send the Expanded Idle status 0x12 instead. After receiving reader data, the host device must send the Clear Read status 0x09. If the SIO-7300 received exactly 26 bits, it will parse out the facility code and badge number rather than send the unformatted data. The facility code and badge ID will be placed at the right of the 5 byte buffer in the same format as the Simulate 26 Bit Wiegand command uses. To avoid this functionality, use the Expanded Idle status 0x16 instead. If the SIO-7300 is in Wiegand configured for Wiegand Output, or has not received Wiegand data, the SIO-7300 will respond with the Idle Status 0x15 (Response).
0x15 (Response)	Idle	3 bytes	The first byte is a bit mask representing the state of each digital input. The second and third bytes are the values of Analog 1 and Analog 2, respectively. See SIO-7300 Input Data for the bit mask.

Cypress SIO-7300 TCP/IP Edge Device - Status Values *(cont.)*

Status	Status Name	Data Field Length	Data Field Contents
0x16 (Command)	Simulate 26 Bit Wiegand	3 bytes	This command is only valid when the SIO-7300 is configured for Wiegand Output. The first byte controls the 8 bit facility code, and the next two bytes control the 15 bit badge number (big endian). The SIO-7300 will respond with the Idle status 0x15.
0x16 (Response)	Reader Data	6 or 32 bytes	This response will only occur when the SIO-7300 is configured for Wiegand Input. The length of the Data Field depends on which Idle Status was sent. If the regular Idle Status 0x15 (Poll) was sent, the SIO-7300 will respond using the 24-40 bit format. If the Expanded Idle Status 0x12 was sent, the SIO-7300 will respond using the 24-248 bit format. See SIO Reader Data.
0x18 (Command)	Simulate 24-40 Bit Wiegand	6 bytes	This command is only valid when the SIO-7300 is configured for Wiegand Output. The first byte controls the length of the output data, in bits, and must be between 24 and 40 bits (inclusive). The next 5 bytes are a right justified buffer containing the data to output. The reader will respond with the Idle Status 0x15 (Response).
0x19 (Command)	Simulate 24-248 Bit Wiegand	32 bytes	This command is only valid when the SIO-7300 is configured for Wiegand Output. The first byte controls the length of the output data, in bits, and must be between 24 and 248 bits (inclusive). The next 31 bytes are a right justified buffer containing the data to output. The reader will respond with the Idle Status 0x15 (Response).
0x1F (Command)	Reset System	0 bytes	When the SIO-7300 receives this status, the device will reboot.

Note: An empty Data field means the Data field is 0 bytes in length.

Cypress SIO-7300 TCP/IP Edge Device - Reader Data Formats

The SIO-7300 uses several different Wiegand data formats when sending or receiving reader data to a? host device. These Wiegand data formats are 26 Bit, 40 Bit, and 248 Bit. These data formats are detailed below.

26 Bit Reader Data

This format is only used when sending reader data to the SIO-7300 configured for Wiegand Output using the Simulate 26 bit Wiegand Status 0x16 (Poll).

It consists of a 3 byte Data Field where the first byte is the facility code, and the second and third bytes are the badge number of the credential to output. Parity is calculated and shifted into place by the SIO-7300 before the credential data is transmitted.

40 Bit Reader Data

This format is used when receiving reader data from the SIO-7300 with the Reader Data Status 0x16 (Response), after polling the device with Idle Status 0x15 (Poll). It is also used when sending reader data to the SIO-7300 with the Simulate 24-40 Bit Wiegand Status 0x18.

It consists of of a 6 byte Data Field where the first byte is the length of the reader data and the next 5 bytes are a right justified buffer containing the reader data. Exception: when receiving exactly 26 bits of reader data the SIO-7300 shifts the reader data right by one bit to remove the odd parity bit and clears the even parity bit, leaving the facility code and badge number fields right-justified in the buffer.

248 Bit Reader Data

This format is used when receiving reader data from the SIO-7300 in the Reader Data Status 0x16 (Response) after being polled with the Expanded Idle Status 0x12. It is also used when sending reader data to the SIO-7300 with the Simulate 24-248 Bit Wiegand Status 0x19.

It consists of a 32 byte Data Field where the first byte is the length of the reader data in bits, and the next 31 bytes are a right-justified buffer containing the reader data.

Notes

Despite references to “24-40 Bit” or “24-248”, the Data Formats can contain as little as 1 bit when sending Reader Data to the SIO-7300 in Data Output Mode. The SIO-7300 can receive as few as 4 bits when in Data Input Mode, this data will be in the 40 Bit Reader Data format.

The SIO-7300 originally only supported the Wiegand Interface, the other interfaces were added later. This is why the Statuses and the Reader Data Formats only reference Wiegand. When the SIO-7300 is in Output Mode the Network Controller creates the messages sent to the SIO-7300; part of these messages is the data. The data needs to be in the encoding scheme/format for the interface to which the SIO-7300 is set. Generally, this is a binary encoded data for Wiegand and Unsupervised F/2F interfaces and ABA encoded data Strobed interfaces. The data also needs to be formatted correctly; the SIO-7300 does not format the data.

Example of Wiegand Output Command/Response

This example shows the host device sending the SIO-7300 the Simulate 26 Bit Wiegand (status 0x16) command to output Wiegand data, the response, and the Wiegand output from the SIO. The Wiegand data is a 26 bit read with a facility code of 12 and a badge ID of 3456.

```
Simulate 26 Bit Wiegand Command in raw hex:
0000000BF101F1060016123456A6

 00 00 00    0B     F1     01     F1     06    00     16   12 34 56     A6
[  sync  ] [len] [srce] [dest] [type] [resp] [cmd] [stat] [  data  ] [cksm]

Idle Response in raw hex:
0000000B01F1010600151DFFFF34

 00 00 00    0B     01     F1     01     06    00     15   1D FF FF     34
[  sync  ] [len] [srce] [dest] [type] [resp] [cmd] [stat] [  data  ] [cksm]

Output from Wiegand port:
0 0001 0010 0011 0100 0101 0110 0
```

Command

```
Simulate 26 Bit Wiegand Command in raw hex:
0000000BF101F1060016123456A6

Simulate 26 Bit Wiegand Command separated by field:
 00 00 00    0B     F1     01     F1     06    00     16   12 34 56     A6
[  sync  ] [len] [srce] [dest] [type] [resp] [cmd] [stat] [  data  ] [cksm]
```

00 00 00 (Sync) 3 bytes - Static 3 bytes (0x000000) at the start of every packet.

0B (Length) 1 byte - Length of the packet in bytes starting from the Length Field to the Check Sum Field (excludes the Sync Field). This packet is 11 bytes in length excluding the Sync Field, or 0x0B.

F1 (Source) 1 byte - Address of the device the packet originated from. This packet is a command to the SIO-7300 from the host device (network controller). The host device has a static address of 0xF1.

01 (Destination) 1 byte - Address of the device the packet is being sent to. The SIO-7300's address is static, 0x01. This packet is being sent from the host device to the SIO-7300.

F1 (Type) 1 byte - This field is set based on which device generated the message. The host device generated this message so the Type Field is set to 0xF1.

06 (Response) 1 byte - The Response Field is always a constant value of 0x06.

00 (Command) 1 byte - The Command Field is always a constant value of 0x00.

16 (Status) 1 byte - The Status Field shows the command/response codes. 0x16 is the Simulate 26 Bit Wiegand command. This tells the SIO-7300 to output the 3 bytes of data in the Data Field as a 26 bit Wiegand read. The SIO-7300 will automatically generate the parity bits.

12 34 56 (Data) 3 bytes - The 0x16 Simulate 26 Bit Wiegand command has a data payload of 3 bytes that are written to the Data Field. The first byte in the Data Field is the facility code. When the first byte, 0x12, is converted to decimal the value of the facility code is 18. The second and third bytes in the Data Field are the card number. When the second and third bytes, 0x3456, is converted to decimal the value of the card number is 13398. The SIO-7300 automatically generates the parity bits.

A6 (Checksum) 1 byte - The sum of all data in the packet before the Checksum Field, modulo 0x100 (masked to one byte). The checksum for this packet is 0xA6.

Response

```
Idle Response in raw hex:
0000000B01F1010600151DFFFF34

Idle Response separated by field:
 00 00 00    0B     01     F1     01     06    00     15   1D FF FF     34
[  sync  ] [len] [srce] [dest] [type] [resp] [cmd] [stat] [  data  ] [cksm]
```

00 00 00 (Sync) 3 bytes - Static 3 bytes (0x000000) at the start of every packet.

0B (Length) 1 byte - Length of the packet in bytes starting from the Length Field to the Check Sum Field (excludes the Sync Field). This packet is 11 bytes in length excluding the Sync Field, or 0x0B.

01 (Source) 1 byte - Address of the device the packet originated from. This packet is a response to the host device from the SIO-7300. The SIO-7300 has a static address of 0x01.

F1 (Destination) 1 byte - Address of the device the packet is being sent to. The host device's address is static, 0xF1. This packet is being sent from the SIO-7300 to the host device.

01 (Type) 1 byte - This field is set based on which device generated the message. The host device did not generate this message so the Type Field is set to 0x01.

06 (Response) 1 byte - The Response Field is always a constant value of 0x06.

00 (Command) 1 byte - The Command Field is always a constant value of 0x00.

15 (Status) 1 byte - The Status Field shows the command/response codes. 0x15 is the Idle response. It is the only Status the SIO-7300 will respond to the host device with when set to Data Output Mode.

1D FF FF (Data) 3 bytes - The 0x15 Idle response has a 3 byte data payload that are written to the Data Field. The first byte is a bit mask representing the state of each digital input. 0x1D is 00011101.

```
Data:       00011101
Bit Number: 76543210
```

Referencing the Input Data Bytes section, the first byte in the Data Field shows that the AUX 2, AUX 1, LED, and AUX 3 digital input pins are normal at 5V, not active.

The second byte represents the state of the Analog 1 input pin, the third byte represents the state of the Analog 2 input pin. The values of the Analog 1 and 2 pins range from 0x00 to 0xFF (0 to 255). 0x00 represents 0V and 0xFF represents 5V. In this packet, the SIO-7300 is reporting that both the Analog 1 and 2 pins are at 5V.

34 (Checksum) 1 byte - The sum of all data in the packet before the Checksum Field, modulo 0x100 (masked to one byte). The checksum for this packet is 0x34.

Wiegand Output

Below is the analysis of the Wiegand output from the SIO-7300. The analysis shows that the Wiegand output matches the data in the Simulate Wiegand 26 Bit command (Status 0x16). The Facility Code is 18 and the Card Number is 13398.

```
Raw output from Wiegand port:
00001001000110100010101100 Raw Data
01234567890123456789012345 Bit Number

Wiegand output separated by field:
0 00010010 0011010001010110 0 Field Separated Data
P FFFFFFFF NNNNNNNNNNNNNNNN P Field Labels

P = Parity Bit
F = Facility Code Bit
N = Card Number Bit

Facility Code:
00010010
0001 0000 = 12 (hex) = 18 (dec)

Card Number:
0011010001010110
0011 0100 0101 0110 = 3456 (hex) = 13398 (dec)
```

Example of Wiegand Input Command/Response

This example shows the polling sequences for the SIO-7300 in Data Input Mode. These polling sequences show the host device polling the SIO-7300 when it does and does not have reader data to report. The SIO-7300 is expecting and receives 26 bits of reader data.

SIO-7300 Has Not Received Reader Data Polling Loop

This is the polling sequence showing the poll/command from the host device and the response from the SIO-7300. If the SIO-7300 has not received reader data, the polling loop will be the host device sending the Idle (status 0x15) or Expanded Idle (status 0x12) polls/commands and the SIO responding with the Idle (status 0x15) response.

```
Idle Command in raw hex:
0000000AF101F1060015000008

 00 00 00    0A     F1     01     F1     06    00     15    00 00     08
[  sync  ] [len] [srce] [dest] [type] [resp] [cmd] [stat] [ data ] [cksm]

Idle Response (no reader data):
0000000B01F1010600151DFFFF34

 00 00 00    0B     01     F1     01     06    00     15   1D FF FF     34
[  sync  ] [len] [srce] [dest] [type] [resp] [cmd] [stat] [  data  ] [cksm]
```

Command

```
Idle Command in raw hex:
0000000AF101F1060015000008

Idle Command separated by field:
 00 00 00    0A     F1     01     F1     06    00     15    00 00     08
[  sync  ] [len] [srce] [dest] [type] [resp] [cmd] [stat] [ data ] [cksm]
```

00 00 00 (Sync) 3 bytes - Static 3 bytes (0x000000) at the start of every packet.

0A (Length) 1 byte - Length of the packet in bytes starting from the Length Field to the Check Sum Field (excludes the Sync Field). This packet is 10 bytes in length excluding the Sync Field, or 0x0A.

F1 (Source) 1 byte - Address of the device the packet originated from. This packet is a command to the SIO-7300 from the host device (network controller). The host device has a static address of 0xF1.

01 (Destination) 1 byte - Address of the device the packet is being sent to. The SIO-7300's address is static, 0x01. This packet is being sent from the host device to the SIO-7300.

F1 (Type) 1 byte - This field is set based on which device generated the message. The host device generated this message so the Type Field is set to 0xF1.

06 (Response) 1 byte - The Response Field is always a constant value of 0x06.

00 (Command) 1 byte - The Command Field is always a constant value of 0x00.

15 (Status) 1 byte - The Status Field shows the command/response codes. 0x15 is the Idle command. This command is used when expecting between 24 and 40 bits of reader data. Use the Expanded Idle (0x12) command if more than 40 bits of reader data is expected.

00 00 (Data) 2 bytes - The 0x15 Idle command has a 2 byte data payload. The first byte is a bit mask that controls the output pins. See the Output Control Byte section for reference. The bits in the Output Control Byte are set (1) when the output is being activated, and are not set (0) when the output remaining normal. None of the outputs are being activated so the first byte is 0x00. The second byte is static and is always 0x00.

08 (Checksum) 1 byte - The sum of all data in the packet before the Checksum Field, modulo 0x100 (masked to one byte). The checksum for this packet is 0x08.

Response

```
Idle Response (no reader data) in raw hex:
0000000B01F1010600151DFFFF34

Idle Response separated by field:
 00 00 00    0B     01     F1     01     06    00     15   1D FF FF     34
[  sync  ] [len] [srce] [dest] [type] [resp] [cmd] [stat] [  data  ] [cksm]
```

00 00 00 (Sync) 3 bytes - Static 3 bytes (0x000000) at the start of every packet.

0B (Length) 1 byte - Length of the packet in bytes starting from the Length Field to the Check Sum Field (excludes the Sync Field). This packet is 11 bytes in length excluding the Sync Field, or 0x0B.

01 (Source) 1 byte - Address of the device the packet originated from. This packet is a response to the host device from the SIO-7300. The SIO-7300 has a static address of 0x01.

F1 (Destination) 1 byte - Address of the device the packet is being sent to. The host device's address is static, 0xF1. This packet is being sent from the SIO-7300 to the host device.

01 (Type) 1 byte - This field is set based on which device generated the message. The host device did not generate this message so the Type Field is set to 0x01.

06 (Response) 1 byte - The Response Field is always a constant value of 0x06.

00 (Command) 1 byte - The Command Field is always a constant value of 0x00.

15 (Status) 1 byte - The Status Field shows the command/response codes. 0x15 is the Idle response. The SIO-7300 will respond with this status when it has no reader data to report.

1D FF FF (Data) 3 bytes - The 0x15 Idle response has a 3 byte data payload that are written to the Data Field. The first byte is a bit mask representing the state of each digital input. 0x1D is 00011101.

```
Data:       00011101
Bit Number: 76543210
```

Referencing the Input Data Bytes section, the first byte in the Data Field shows that the AUX 2, AUX 1, LED, and AUX 3 digital input pins are normal at 5V, not active.

The second byte represents the state of the Analog 1 input pin, the third byte represents the state of the Analog 2 input pin. The values of the Analog 1 and 2 pins range from 0x00 to 0xFF (0 to 255). 0x00 represents 0V and 0xFF represents 5V. In this packet, the SIO-7300 is reporting that both the Analog 1 and 2 pins are at 5V.

34 (Checksum) 1 byte - The sum of all data in the packet before the Checksum Field, modulo 0x100 (masked to one byte). The checksum for this packet is 0x34.

SIO-7300 Has Received Reader Data Polling Sequence

This polling sequence shows the proper sequence of commands and responses between the host device and the SIO-7300 when the SIO has reader data to report. The host device sends the Idle command (0x15) to the SIO, the SIO responds with the Reader Data Response (0x16), the host device then sends the Clear Read command (0x09) to reset the SIO so it is ready for the next set of reader data, finally the SIO responds with the Clear Read response (0x09) signifying it is ready and the host device can start polling it with the Idle command (0x15) again.

```
Idle Command in raw hex:
0000000AF101F1060015000008

Idle Command separated by field:
 00 00 00    0A     F1     01     F1     06    00     15    00 00     08
[  sync  ] [len] [srce] [dest] [type] [resp] [cmd] [stat] [ data ] [cksm]

Reader Data Response:
0000000E01F1010600161A00002469571B

Reader Data Response separated by field:
 00 00 00    0E     01     F1     01     06    00     16    1A 00 00 24 69 57     1B
[  sync  ] [len] [srce] [dest] [type] [resp] [cmd] [stat] [       data       ] [cksm]

Clear Read Command in raw hex:
0000000AF101F10600090000FC

Clear Read Command separated by field:
 00 00 00    0A     F1     01     F1     06    00     09    00 00     FC
[  sync  ] [len] [srce] [dest] [type] [resp] [cmd] [stat] [ data ] [cksm]

Clear Read Response in raw hex:
0000000801F1010600090A

Clear Read Response separated by field:
 00 00 00    08     01     F1     01     06    00     09                0A
[  sync  ] [len] [srce] [dest] [type] [resp] [cmd] [stat] [  data  ] [cksm]
```

Idle Command

```
Idle Command in raw hex:
0000000AF101F1060015000008

Idle Command separated by field:
 00 00 00    0A     F1     01     F1     06    00     15    00 00     08
[  sync  ] [len] [srce] [dest] [type] [resp] [cmd] [stat] [ data ] [cksm]
```

See Command in the “SIO-7300 Has Not Received Reader Data Polling Loop” section, the Idle command (0x15) is the same in both polling sequences.

Reader Data Response

```
Reader Data Response:
0000000E01F1010600161A00002469571B

Reader Data Response separated by field:
 00 00 00    0E     01     F1     01     06    00     16    1A 00 00 24 69 57     1B
[  sync  ] [len] [srce] [dest] [type] [resp] [cmd] [stat] [       data       ] [cksm]
```

00 00 00 (Sync) 3 bytes - Static 3 bytes (0x000000) at the start of every packet.

0E (Length) 1 byte - Length of the packet in bytes starting from the Length Field to the Check Sum Field (excludes the Sync Field). This packet is 14 bytes in length excluding the Sync Field, or 0x0E.

01 (Source) 1 byte - Address of the device the packet originated from. This packet is a response to the host device from the SIO-7300. The SIO-7300 has a static address of 0x01.

F1 (Destination) 1 byte - Address of the device the packet is being sent to. The host device's address is static, 0xF1. This packet is being sent from the SIO-7300 to the host device.

01 (Type) 1 byte - This field is set based on which device generated the message. The host device did not generate this message so the Type Field is set to 0x01.

06 (Response) 1 byte - The Response Field is always a constant value of 0x06.

00 (Command) 1 byte - The Command Field is always a constant value of 0x00.

16 (Status) 1 byte - The Status Field shows the command/response codes. 0x16 is the Reader Data response. The host device sent the 0x15 Idle command so the SIO-7300 will responds with reader data in the 24-40 bit format or 26 bit format.

1A 00 00 24 69 57 (Data) 6 bytes - The first byte is the length of the reader data the SIO-7300 received. The first byte is 0x1A, which is 26 bits. The next 5 bytes is the right justified reader data. In this example the SIO-7300 received 26 bits of reader data and responded to the host device with the data in the 26 bit format. The data in the Data Field is actually 24 bits, even though the first byte shows 26 bits. When the SIO-7300 receives exactly 26 bits of reader data it will automatically remove the parity bits and right justify the data. The second and third bytes are 0x00 as they contain no data. Byte 4 is the facility code, 0x24 = 36. Bytes 5 and 6 are the card number, 0x6957 = 26967. This response contains a 26 bit read with a facility code of 36 and a card number of 26967.

1B (Checksum) 1 byte - The sum of all data in the packet before the Checksum Field, modulo 0x100 (masked to one byte). The checksum for this packet is 0x1B.

Clear Read Command

```
Clear Read Command in raw hex:
0000000AF101F10600090000FC

Clear Read Command separated by field:
 00 00 00    0A     F1     01     F1     06    00     09    00 00     FC
[  sync  ] [len] [srce] [dest] [type] [resp] [cmd] [stat] [ data ] [cksm]
```

00 00 00 (Sync) 3 bytes - Static 3 bytes (0x000000) at the start of every packet.

0A (Length) 1 byte - Length of the packet in bytes starting from the Length Field to the Check Sum Field (excludes the Sync Field). This packet is 10 bytes in length excluding the Sync Field, or 0x0A.

F1 (Source) 1 byte - Address of the device the packet originated from. This packet is a command to the SIO-7300 from the host device (network controller). The host device has a static address of 0xF1.

01 (Destination) 1 byte - Address of the device the packet is being sent to. The SIO-7300's address is static, 0x01. This packet is being sent from the host device to the SIO-7300.

F1 (Type) 1 byte - This field is set based on which device generated the message. The host device generated this message so the Type Field is set to 0xF1.

06 (Response) 1 byte - The Response Field is always a constant value of 0x06.

00 (Command) 1 byte - The Command Field is always a constant value of 0x00.

09 (Status) 1 byte - The Status Field shows the command/response codes. 0x09 is the Clear Read command. This command clears the I/O (set by the first byte in the Data Field) and the reader data buffer.

00 00 (Data) 2 bytes - The 0x09 Clear Read command has a 2 byte data payload. The first byte is a bit mask that controls the output pins. See the Output Control Byte section for reference. The bits in the Output Control Byte are set (1) when the output is being activated, and are not set (0) when the output remaining normal. None of the outputs are being activated so the first byte is 0x00. The second byte is static and is always 0x00.

FC (Checksum) 1 byte - The sum of all data in the packet before the Checksum Field, modulo 0x100 (masked to one byte). The checksum for this packet is 0xFC.

Clear Read Response

```
Clear Read Response in raw hex:
0000000801F1010600090A

Clear Read Response separated by field:
 00 00 00    08     01     F1     01     06    00     09                0A
[  sync  ] [len] [srce] [dest] [type] [resp] [cmd] [stat] [  data  ] [cksm]
```

00 00 00 (Sync) 3 bytes - Static 3 bytes (0x000000) at the start of every packet.

08 (Length) 1 byte - Length of the packet in bytes starting from the Length Field to the Check Sum Field (excludes the Sync Field). This packet is 8 bytes in length excluding the Sync Field, or 0x08.

01 (Source) 1 byte - Address of the device the packet originated from. This packet is a response to the host device from the SIO-7300. The SIO-7300 has a static address of 0x01.

F1 (Destination) 1 byte - Address of the device the packet is being sent to. The host device's address is static, 0xF1. This packet is being sent from the SIO-7300 to the host device.

01 (Type) 1 byte - This field is set based on which device generated the message. The host device did not generate this message so the Type Field is set to 0x01.

06 (Response) 1 byte - The Response Field is always a constant value of 0x06.

00 (Command) 1 byte - The Command Field is always a constant value of 0x00.

09 (Status) 1 byte - The Status Field shows the command/response codes. 0x09 is the Clear Read response. This response is always sent after the SIO-7300 receives the Clear Read command.

(Data) 0 bytes - The Clear Read response has an empty Data Field.

0A (Checksum) 1 byte - The sum of all data in the packet before the Checksum Field, modulo 0x100 (masked to one byte). The checksum for this packet is 0x0A.

Cypress SIO-7300 TCP/IP Edge Device - I/O Pins Overview

Overview

The SIO-7300 supports various I/O that are controlled by the first byte in the Data field. These I/O points are LED, AUX 1, AUX 2, AUX 3, Relay 1 and Relay 2. This section covers how to use these I/O points in Input and Output modes.

Pin Name	Input/Output	Location	Description
D0 I/O	Input or Output	J2-8	D0 Wiegand data line, Strobed Clock line, and unused for F/2F interface. I/O direction is set with DIP Switches during configuration mode.
D1 I/O	Input or Output	J2-7	D1 Wiegand data line, Strobed Data line, and F/2F data line. I/O direction is set with DIP Switches during configuration mode.
LED I/O	Input or Output	J2-6	Active low digital I/O pin designated for LED signal. The normal state is 5V (high), the active state is 0V (low). LED I/O direction is opposite data interface I/O direction.
AUX 1 I/O	Input or Output	J3-8	Active low digital I/O pin designated for auxiliary signal. The normal state is 5V (high), the active state is 0V (low). I/O direction is set with DIP Switch 4 in Configuration Mode.
AUX 2 I/O	Input or Output	J3-9	Active low digital I/O pin designated for auxiliary signal. The normal state is 5V (high), the active state is 0V (low). I/O direction is set with DIP Switch 5 in Configuration Mode.
AUX 3 IN	Input	J3-10	Active low digital input pin designated for auxiliary input signal. The normal state is 5V (high), the active state is 0V (low).
AN 1 IN	Input	J2-5	Analog input pin.
AN 2 IN	Input	J2-4	Analog input pin.
Relay 1	Output	J3-4 J3-5 J3-6	SPDT Relay, dry/wet contact.
Relay 2	Output	J3-1 J3-2 J3-3	SPDT Relay, dry/wet contact.

Output Control Byte

The SIO-7300's digital outputs and relays are each controlled by the state of a bit in the first byte of the Data Field in messages that contain an output payload, such as the Idle (0x15) and Clear Read (0x09) commands. If the associated bit is set to 1, then the output is activated (0V). Otherwise, the bit is set to 0, and the output is normal (5V). The following table shows which bit in the Output Control Byte is assigned to each output. Not all bits in the Output Control Byte are assigned to an Output.

Bit	7	6	5	4	3	2	1	0
Output				AUX 2	AUX 1	LED	Relay 2	Relay 1

If any of the signals are configured as inputs, attempting to set their state with a command will have no effect.

The SIO-7300's digital outputs are active-low, open-collector style outputs, meaning that when they are inactive, they are pulled to 5V with an internal pull-up resistor. When they are active, they are pulled to ground through an NPN transistor.

The SIO-7300's relay outputs are SPDT style relays with common, normally closed, and normally open contacts. When they are normal, the common and normally closed contacts are electrically connected, and the normally open contact is disconnected. When they are active, the common and normally open contacts are electrically connected, and the normally closed contact is disconnected. If the associated bit is set (1), then the relay output is activated. Otherwise, the bit is not set (0), and the relay output is normal.

Commands that contain the Output Control Byte in the Data Field are the 0x09 Clear Read, 0x12 Expanded Idle, 0x14 Reset State, and 0x15 Idle commands.

Input Data Bytes

The state of the SIO-7300's digital inputs are each represented by the state of a bit in the first byte of the Data Field in messages that contain an input payload, such as the Idle (0x15) response. If the associated bit is set to 1, then the output is activated (0V). Otherwise, the bit is set to 0, and the output is normal (5V). The mapping from bits in the digital input data byte to input signals is detailed in the following table.

Bit	7	6	5	4	3	2	1	0
Input				AUX 2	AUX 1	LED		AUX 3

The SIO-7300's digital inputs are active-low and internally pulled high (5V), meaning they are inactive when either disconnected or asserted high, and are active when asserted low (0V). Most of the SIO-7300's digital inputs can also be configured to be digital outputs, except for AUX 3, which is input only.

The second and third bytes of input data payloads are the analog values of Analog 1 and Analog 2, respectively; where a value of 255 (0xFF) represents 5 volts on that input, and a value of 0 (0x00) represents 0 volts on that input.

The default Input Data Bytes are 0x1DFFFF (no active inputs). The 0x15 Idle response is the only response that contains the input data bytes.

0x15 Idle Response Data Field

Byte 1 Digital Input Values	Byte 2 Analog Input 1 Value	Byte 3 Analog Input 2 Value

LED Output

When the SIO-7300 is set to Data Input Mode the LED I/O pin is an output. The LED I/O pin is typically used to control a LED input on a credential reader or other similar device. The LED I/O pin is an active low digital output. The normal state is high (5V). The active state is low (0V) When the SIO-7300 receives a command from the host device that contains the Output Control Byte in the Data Field and bit 2 is set (1), the LED I/O pin will change from the normal state (5V) to the active state (0V). The LED I/O pin will remain in the active state (0V) until the SIO-7300 receives another command with bit 2 not set (0) in the Output Control Byte.

Commands that contain the Output Control Byte in the Data Field are the 0x09 Clear Read, 0x12 Expanded Idle, 0x14 Reset State, and 0x15 Idle commands.

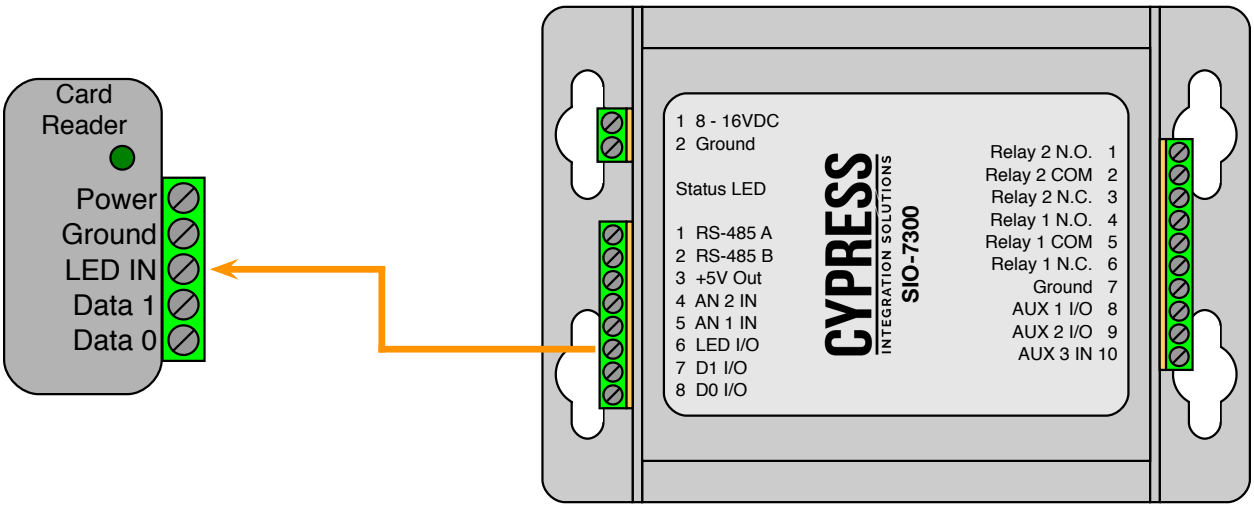

LED Input

When the SIO is set to Data Output Mode the LED I/O pin is an input. The LED I/O pin is typically controlled by a LED output on an access controller or other similar device. The LED I/O pin is an active low digital input. The normal state is high (5V). The active state is low (0V). When the LED I/O pin is pulled low (0V), the next 0x15 Idle response will have bit 2 set (1) in the first Input Data Byte. When the LED I/O pin is released by the access controller and returns to the normal state (5V), the next 0x15 Idle response will have bit 2 not set (0).

The 0x15 Idle response is the only response that contains the input data bytes.

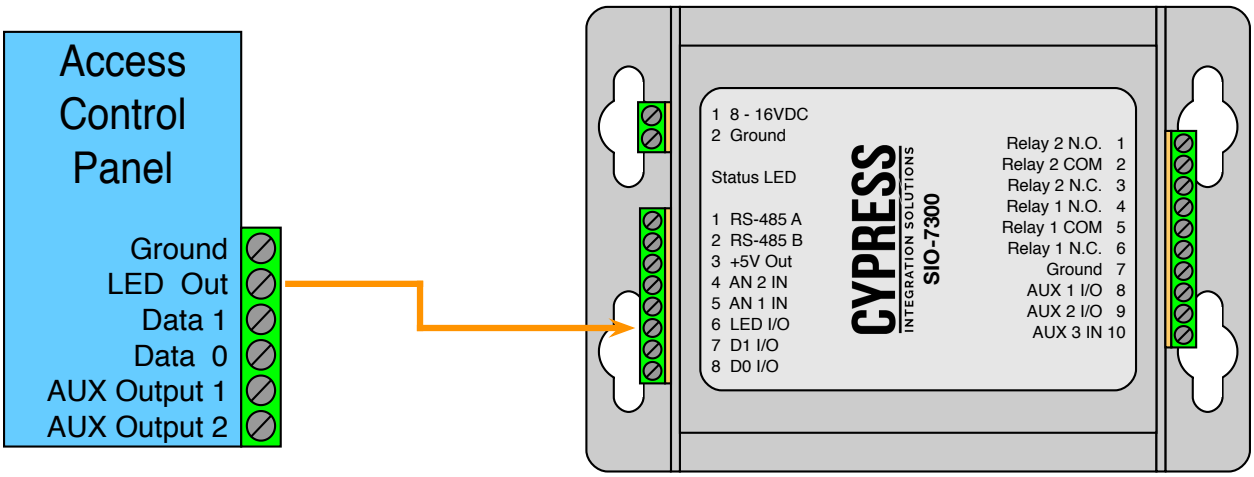

Auxiliary I/O Overview

There are three Auxiliary I/O pins; AUX 1 I/O, AUX 2 I/O, and AUX 3 IN. The AUX 1 I/O and AUX 2 I/O pins can be configured as input or output pins with the DIP Switches during configuration. In configuration mode, DIP Switch 4 controls the I/O direction of the AUX 1 I/O pin, and DIP Switch 5 controls the I/O direction of the AUX 2 I/O pin. The AUX 3 IN pin is not configurable and is always an input pin. The Auxiliary I/O pins are active low digital input or active low digital output pins. The normal state is high (5V). The active state is low (0V).

Auxiliary Inputs

All three Auxiliary I/O pins can be configured as inputs. The diagram below shows all three Auxiliary pins connected to digital output pins on the access controller. When the access controller or other similar device pulls an Auxiliary Input pin low (0V), the input pin is now in the active state. When an Auxiliary Input pin is in the active state (0V), the next 0x15 Idle response will have the associated bit set (1) in the first Input Data Byte. Once the access controller or similar device releases the Auxiliary Input pin, it will return to the normal state (5V) and the next 0x15 Idle response will have the associated bit not set (0) in the first Input Data Byte.

The 0x15 Idle response is the only response that contains the input data bytes.

The AUX 1 I/O pin controls bit 3 in the first Input Data Byte. The AUX 2 I/O pin controls bit 4 in the first Input Data Byte. The AUX 3 IN pin controls bit 0 in the first Input Data Byte.

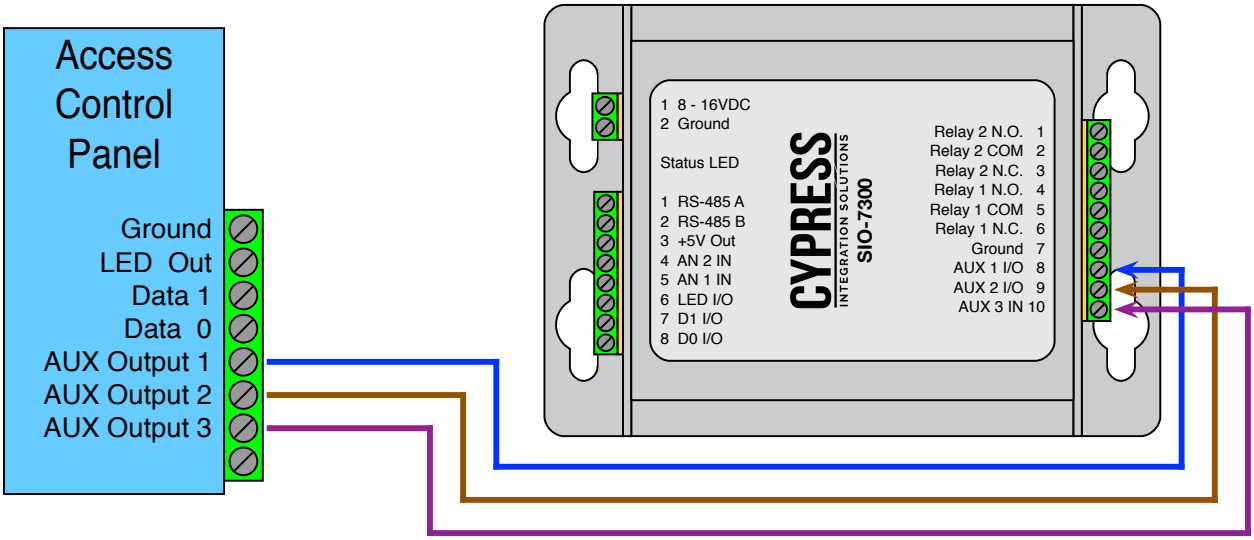

The Auxiliary Input pins can also be used with REX switches, dry contact relay outputs, and other similar hardware. The diagram below shows a REX switch connected to the AUX 2 I/O pin and Ground. When the REX switch is closed it will connect the AUX 2 I/O pin to Ground, causing it to change to the active state (0V). The next 0x15 Idle response will have bit 4 set (1) in the first Input Data Byte. When the REX switch opens, the AUX 2 I/O pin will return the normal state (5V).

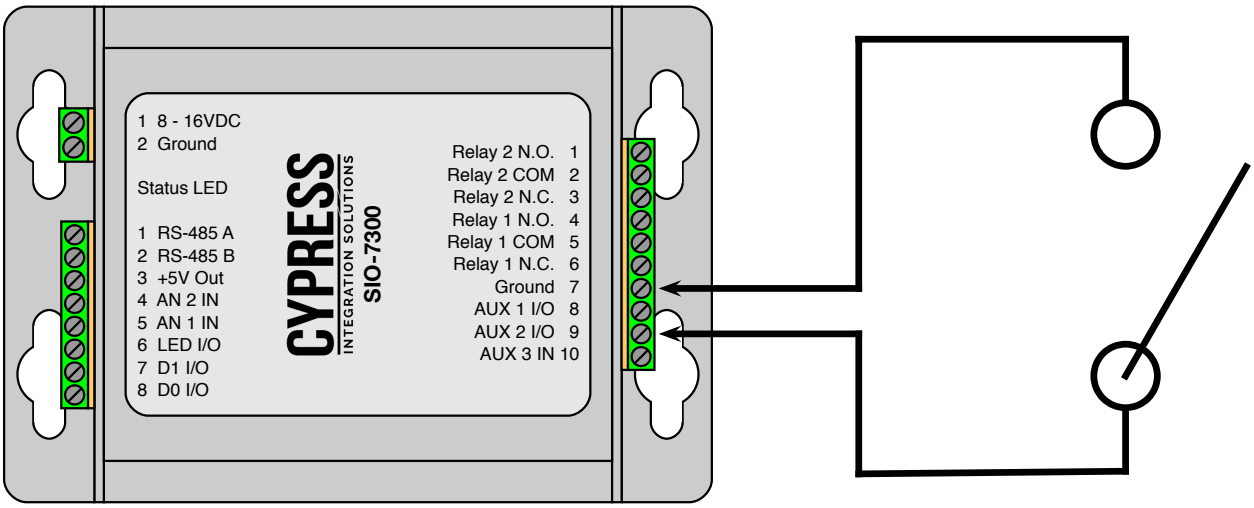

Auxiliary Outputs

AUX 1 I/O and AUX 2 I/O pins can be configured as outputs. The diagram below shows the AUX 1 I/O and AUX 2 I/O pins connected to input pins on the access controller. When the SIO-7300 receives a command from the host device that contains the Output Control Byte the AUX 1 I/O and AUX 2 I/O pins will follow the state of the associated bit. The state of the AUX 1 I/O pin is controlled by bit 3 in the Output Control Byte. The state of the AUX 2 I/O pin is controlled by bit 4 in the Output Control Byte. If the associated bit in the Output Control Byte is set (1), then the state of the output pin will change to the active state (0V). If the associated bit in the Output Control Byte is not set (0), then the state of the output pin will change to the normal state (5V).

Commands that contain the Output Control Byte in the Data Field are the 0x09 Clear Read, 0x12 Expanded Idle, 0x14 Reset State, and 0x15 Idle commands.

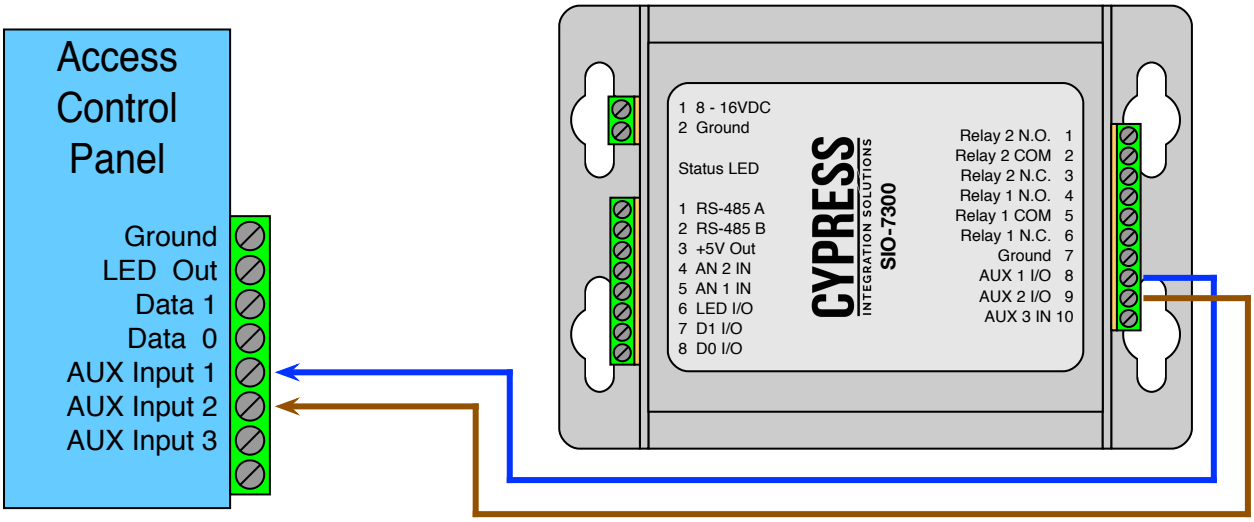

Cypress SIO-7300 TCP/IP Edge Device - Analog Inputs

Analog Input Overview

There are two Analog Input pins, AN 1 IN and AN 2 IN. The Analog Input pins are only inputs, they cannot be configured to be outputs. The values of the Analog Input pin are represented in the second and third bytes of the Data Field in the 0x15 Idle response.

0x15 Idle Response Data Field

Byte 1 Digital Input Values	Byte 2 Analog Input 1 Value	Byte 3 Analog Input 2 Value

The diagram above shows the three bytes of the 0x15 Idle Response Data Field. The value of AN 1 IN is represented by the second byte, and the value of AN 2 IN is represented by the third byte. The value of the Analog Input pins is 0 - 255, a value of 255 (0xFF) represents 5V on the Analog Input pin and a value of 0 (0x00) represents 0V on the Analog Input pin. The Analog Input pins are connected to internal pull-up resistors, the Analog Input pins idle high at 5V. The default value of the Analog Input pins is 255 (0xFF).

Supervised Analog Input

The Analog Inputs can be used as a supervised input. The diagram below shows a switch and two 1K resistors connected to the AN 1 IN pin. This creates four possible conditions on the AN 1 IN pin, shown in the table below. The four conditions change the resistance between the AN 1 IN pin and ground, causing the voltage level on the AN 1 IN pin to change. This changes the value of Byte 2 in the 0x15 Idle Response Data Field for each condition. The host device can monitor the state of the AN 1 IN pin and respond accordingly to each condition. The third and fourth conditions in the table are alarm conditions, indicating either tampering or a failure with the switch. Other resistor values can be used to get different voltages/analog values on the Analog Input pins.

Condition	Resistance Value	Voltage	Analog Input Value
Switch is Open	2K	0.833V	42, 0x2A
Switch is Closed	1K	0.456V	23, 0x17
Switch Wire is Cut (no connection)	∞	5V	255, 0xFF
AN 1 IN Shorted to Ground	0	0V	0, 0x00

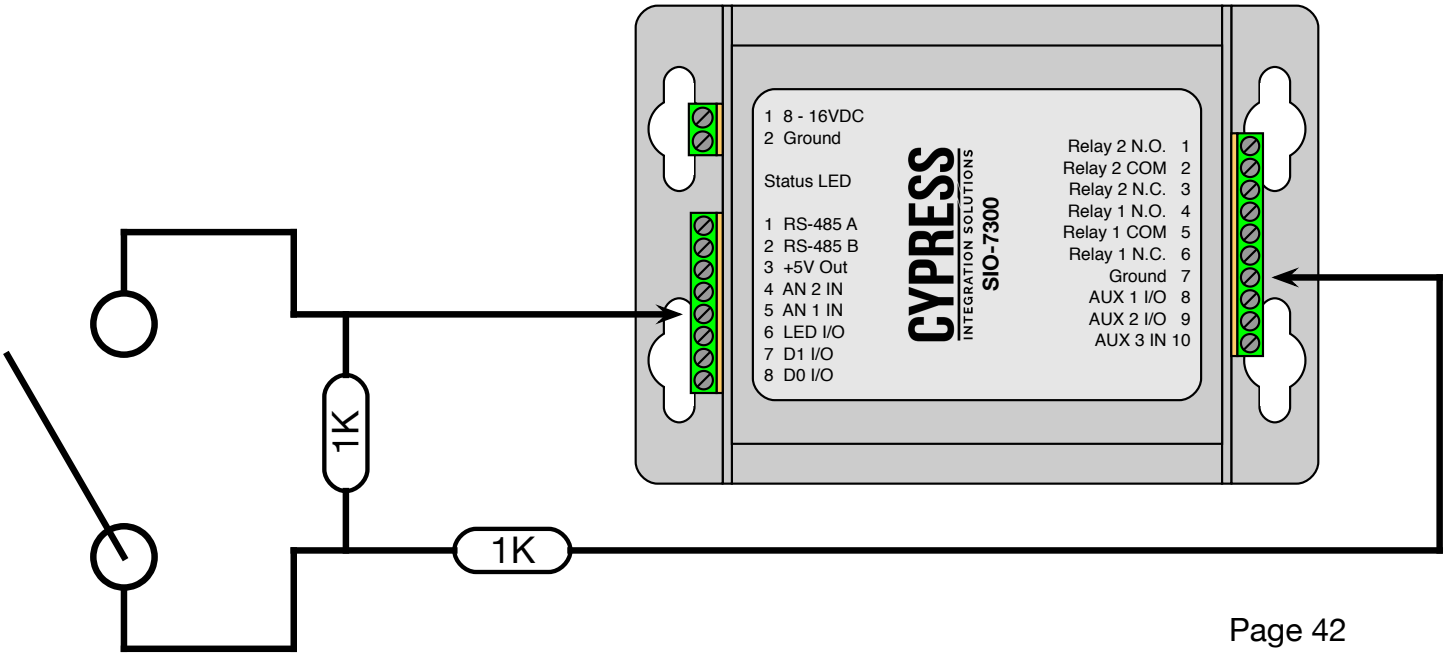

Analog Devices

Analog devices with a voltage output between 0-5V can be connected to the Analog Input pins, such as a thermometer or a pressure sensor. The diagram below shows an analog thermometer connected to the AN 2 IN pin. As the temperature changes the voltage output of the thermometer changes. This changed the voltage on the AN 2 IN pin, providing a different analog value for the host device to monitor.

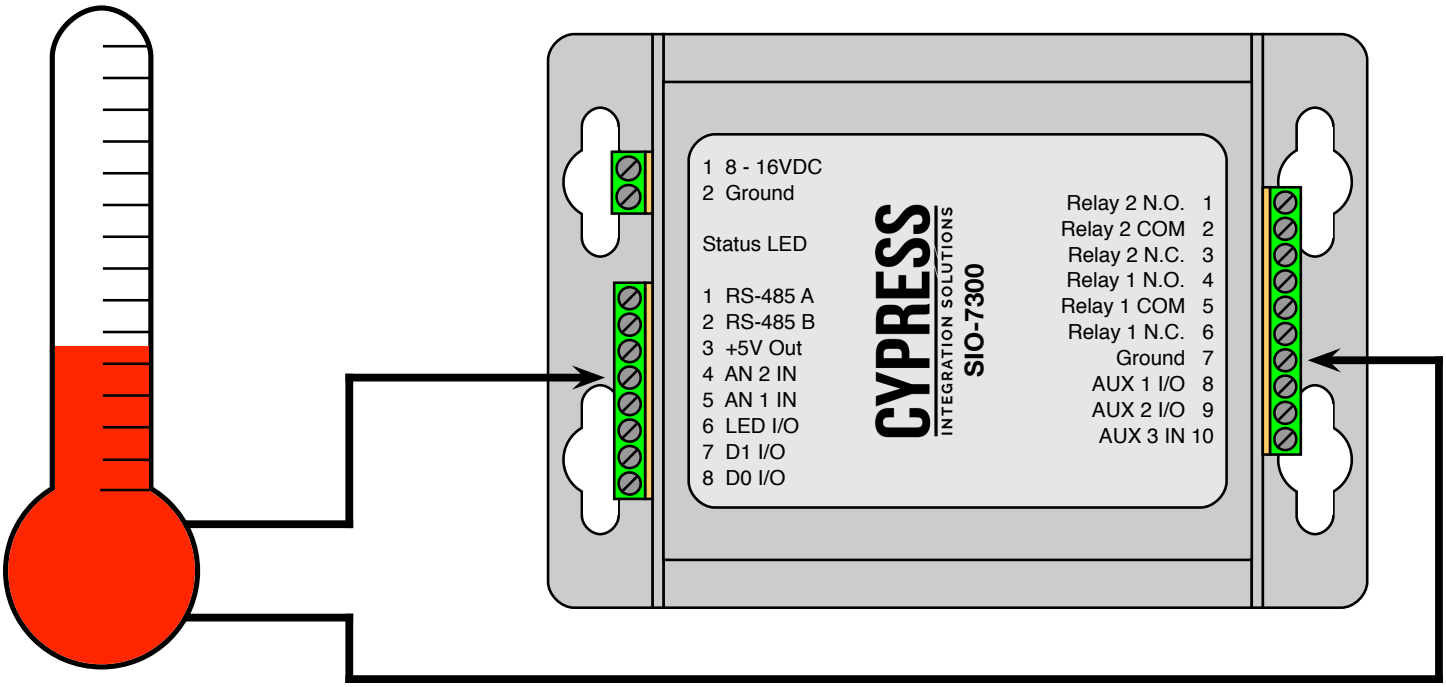

Cypress SIO-7300 TCP/IP Edge Device - Relay Outputs

Relay Outputs Overview

The SIO-7300 has two dry contact relay outputs, Relay 1 and Relay 2. Each relay output is a Single Pole Double Throw (SPDT) relay and has three pins, Normally Open (N.O.), Common (COM), and Normally Closed (N.C.). Each relay output has a normal state and an active state. When the relay output is in the normal state, the Normally Closed (N.C.) and and Common (COM) pins are continuous. When the relay output is in the active state, the Normally Open (N.O.) and Common (COM) pins are continuous. The relay outputs can be used as dry or wet contacts, and have the following power ratings: 30 VDC at 1 A, 125 VAC at 300 mA

The state of each relay output is controlled by a bit in the Output Control Byte. Relay 1 is controlled by bit 0, and Relay 2 is controlled by bit 1 in the Output Control Byte. When the relay control bit is set (1), the associated relay changes to the active state. When the relay control bit is not set (0), the associated relay changes to the normal state.

Commands that contain the Output Control Byte in the Data Field are the 0x09 Clear Read, 0x12 Expanded Idle, 0x14 Reset State, and 0x15 Idle commands.

These diagrams show the normal and active states of Relay 1.

The diagram to the left shows the normal state of Relay 1. Bit 0 in the Output Control Byte is not set (0). Relay 1 COM and Relay 1 N.C. are continuous.

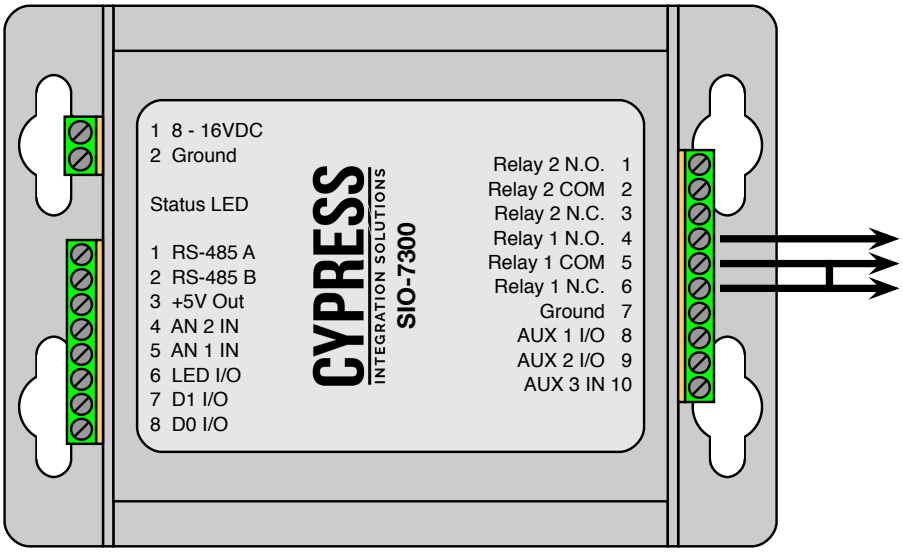

The diagram to the left shows the active state of Relay 1. Bit 0 in the Output Control Byte is set (1). Relay 1 COM and Relay 1 N.O. are continuous.

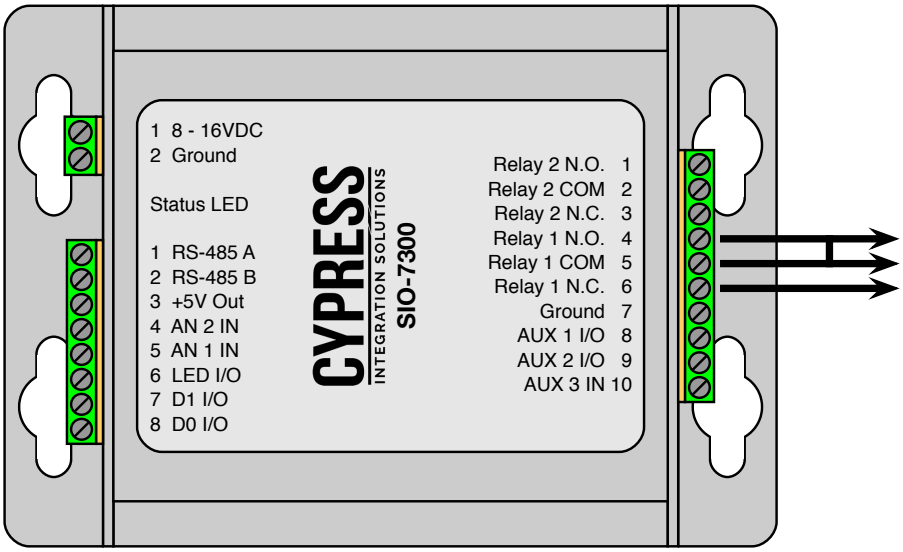

Using a Relay Output as a Wet Contact

The diagram below shows how to use the relay outputs as a wet contact. The power (red) line from the 24VDC is run through Relay 2. While Relay 2 is in the normal state Relay 2 COM and Relay 2 N.O. are not continuous and the power circuit is incomplete. While Relay 2 is in the active state Relay 2 COM and Relay 2 N.O. are continuous and the power circuit is complete, activating the door strike.

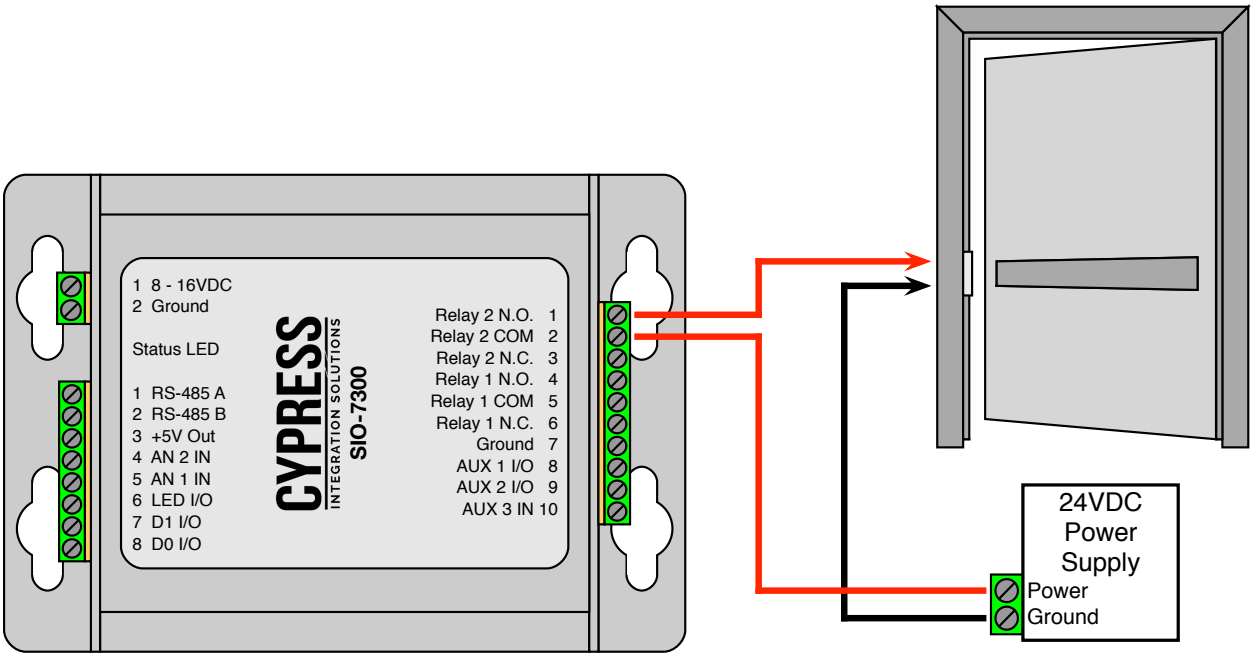

Using a Relay Output as a Dry Contact
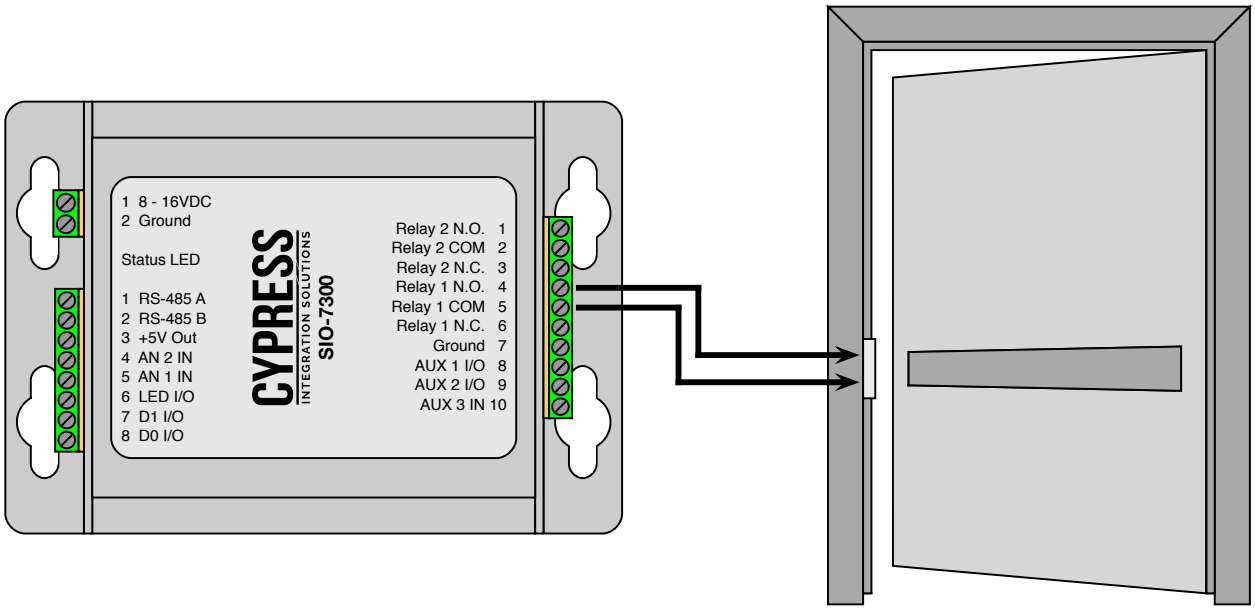
The diagram below shows how to use Relay 1 as a dry contact. Relay 1 COM and Relay 1 N.O. are connected directly to the input on the door strike. While Relay 1 is in the normal state Relay 1 COM and Relay 1 N.O. are not continuous, the door strike is not activated. While Relay 1 is in the active state Relay 1 COM and Relay 1 N.O. are continuous, and the door strike is activated.